HAL open science

Home-loving boreal hare mitochondria survived several invasions in Iberia: the relative roles of recurrent hybridisation and allele surfing

José Melo-Ferreira, Liliana Farelo, Helder Freitas, Franz Suchentrunk, Pierre Boursot, Paulo C. Alves

To cite this version:

José Melo-Ferreira, Liliana Farelo, Helder Freitas, Franz Suchentrunk, Pierre Boursot, et al.. Home-loving boreal hare mitochondria survived several invasions in Iberia: the relative roles of recurrent hybridisation and allele surfing. Heredity, 2014, 112 (3), pp.265-273. 10.1038/hdy.2013.102 . hal-02347462

HAL Id: hal-02347462

https://hal.umontpellier.fr/hal-02347462v1

Submitted on 27 Nov 2020

HAL is a multi-disciplinary open access archive for the deposit and dissemination of scientific research documents, whether they are published or not. The documents may come from teaching and research institutions in France or abroad, or from public or private research centers.

L'archive ouverte pluridisciplinaire **HAL**, est destinée au dépôt et à la diffusion de documents scientifiques de niveau recherche, publiés ou non, émanant des établissements d'enseignement et de recherche français ou étrangers, des laboratoires publics ou privés.

Heredity (2014) 112, 265–273
© 2014 Macmillan Publishers Limited All rights reserved 0018-067X/14
www.nature.com/hdy

ORIGINAL ARTICLE

Home-loving boreal hare mitochondria survived several invasions in Iberia: the relative roles of recurrent hybridisation and allele surfing

J Melo-Ferreira[1], L Farelo[1,2], H Freitas[1,2], F Suchentrunk[3], P Boursot[4,6] and PC Alves[1,2,5,6]

Genetic introgression from a resident species into an invading close relative can result from repeated hybridisation along the invasion front and/or allele surfing on the expansion wave. Cases where the phenomenon is massive and systematic, such as for hares (genus *Lepus*) in Iberia, would be best explained by recurrent hybridisation but this is difficult to prove because the donor populations are generally extinct. In the Pyrenean foothills, *Lepus europaeus* presumably replaced *Lepus granatensis* recently and the present species border is parallel to the direction of invasion, so that populations of *L. granatensis* in the contact zone represent proxies of existing variation before the invasion. Among three pairs of populations sampled across this border, we find less differentiation of mitochondrial DNA (mtDNA) across than along it, as predicted under recurrent hybridisation at the invasion front. Using autosomal microsatellite loci and X- and Y-linked diagnostic loci, we show that admixture across the border is quasi-absent, making it unlikely that lack of interspecific mtDNA differentiation results from ongoing gene flow. Furthermore, we find that the local species ranges are climatically contrasted, making it also unlikely that ongoing ecology-driven movement of the contact account for mtDNA introgression. The lack of mtDNA differentiation across the boundary is mostly due to sharing of mtDNA from a boreal species currently extinct in Iberia (*Lepus timidus*) whose mitochondria have thus remained in place since the last deglaciation despite successive invasions by two other species. Home-loving mitochondria thus witness past species distribution rather than ongoing exchanges across stabilised contact zones.
Heredity (2014) **112,** 265–273; doi:10.1038/hdy.2013.102; published online 23 October 2013

Keywords: mtDNA introgression; hybridisation; allele surfing; *Lepus* spp.; microsatellites; sex-linked loci

INTRODUCTION

The invasion of the territory of a resident species by an expanding one, with hybridisation during the process, may lead to introgression from the resident species into the invading one, and this is predicted to particularly affect regions of the genome with low rates of intra-specific migration (Currat *et al.*, 2008). The amount of introgression is predicted to be enhanced by higher rates of hybridisation, but also by higher intensity of drift at the front of invasion (when the invading species is still relatively rare and more likely to hybridise) that can accidentally bring introgressed alleles to high frequencies. The more rapid the demographic growth in the invaded territories, the more likely are such high frequencies of introgressed alleles to be further propagated, by a phenomenon designated 'allele surfing' on an expansion wave (Currat *et al.*, 2008; Excoffier and Ray, 2008). Such traces of introgression can gradually be erased by migration from the native species range not affected by introgression, but the amplitude and speed of this phenomenon is expected to depend on migration rate. In species with male-biased migration and female philopatry, as is thought to be the case for most mammals, female-transmitted mitochondrial DNA (mtDNA) are thus expected to be particularly subject to persistent introgression. This simple demographic process may then explain why substantial mtDNA introgression has been repeatedly observed in mammals, and is often more extensive than for the nuclear genome (Petit and Excoffier, 2009). In theory, rare hybridisation events could suffice for the process to occasionally occur, if drift was important enough at the early stages of invasion and consecutive geographic and demographic expansions rapid enough. However, in some instances such as for the three species of hares (genus *Lepus*) present in Iberia, the phenomenon appears to have occurred repeatedly and independently, in a quasi-deterministic manner (Melo-Ferreira *et al.*, 2005, 2007, 2011, 2012). Such a pattern would be best accounted for either if it was driven by selection or if hybridisation occurred repeatedly along the front of advance of the invading species in all cases. Estimating the rate of hybridisation along the front of invasion by observing genetic variation after the invasion has occurred may however be challenging because generally, at the time of observation, the donor populations of the invaded species are extinct. Indirect arguments based on the observation of increasing variability in the direction of invasion may not be conclusive because this pattern could result either from

[1]CIBIO, Centro de Investigação em Biodiversidade e Recursos Genéticos, Universidade do Porto, InBIO Laboratório Associado, Vairão, Portugal; [2]Departamento de Biologia, Faculdade de Ciências da Universidade do Porto, Porto, Portugal; [3]Research Institute of Wildlife Ecology, University of Veterinary Medicine, Vienna, Austria; [4]Institut des Sciences de l'Evolution, Université Montpellier 2, CNRS IRD, Montpellier, France and [5]Wildlife Biology Program, College of Forestry and Conservation, University of Montana, Missoula, MT, USA
[6]These authors contributed equally.
Correspondence: Dr J Melo-Ferreira, CIBIO, Centro de Investigação em Biodiversidade e Recursos Genéticos, Universidade do Porto, InBIO Laboratório Associado, Campus Agrário de Vairão, 4485 661 Vairão, Portugal.
E-mail: jmeloferreira@cibio.up.pt
Received 24 April 2013; revised 23 August 2013; accepted 9 September 2013; published online 23 October 2013

repeated introgression or from surfing of *de novo* mutations on the invasion wave.

The Iberian Peninsula has been an area of recurrent admixture at different timescales among species of hares (genus *Lepus*), because the three extant species have been heavily affected by mtDNA introgression from a fourth species, the mountain hare, *Lepus timidus* (Alves *et al.*, 2003; Melo-Ferreira *et al.*, 2005), which was present in Iberia at the end of the last glacial period (Altuna, 1970) but is currently distributed only in Northern Eurasia and in some isolated populations in Scotland, Ireland and the Alps. The broom hare *Lepus castroviejoi*, which is endemic to the Cantabrian Mountains, was the most massively affected because its aboriginal mtDNA lineage appears to have been totally replaced by mtDNA of *L. timidus* origin during two waves of hybridisation, the more recent one during the last deglaciation period and the earlier one during the Pleistocene (Melo-Ferreira *et al.*, 2012). This suggests that hybridisation with *L. timidus* has been relatively frequent but detailed inferences of its frequency during these two episodes would need more population genetics data than presently available on this species. The Iberian hare, *Lepus granatensis*, is endemic to Iberia, occupies most of the Peninsula and has been studied in more detail in this respect. Populations of the northern half of its range harbour high frequencies of *L. timidus* mtDNA, with increasing frequencies towards the North (Melo-Ferreira *et al.*, 2005). This would fit the idea that *L. granatensis* replaced *L. timidus* in the Northern half of Iberia, favoured by climate warming after the last glacial maximum (Melo-Ferreira *et al.*, 2007). There is evidence of a strong East–West partition of three introgressed mtDNA sublineages, which indicates that the phenomenon occurred at least three times independently during this process (Melo-Ferreira *et al.*, 2011). Therefore, hybridisation was frequent enough for introgression to happen systematically in different parts of the invasion range (although it cannot be completely excluded that selection had a role; see Melo-Ferreira *et al.*, 2011 for discussion). For one of these phylogeographic groups of introgressed *timidus* mtDNA there is also evidence of increased nucleotide diversity towards the north (in the direction of the presumed invasion; Melo-Ferreira *et al.*, 2007). While this pattern would fit the idea of repeated introgression along the invasion front, it was not possible to formally exclude that it results from surfing of *de novo* mutations (Melo-Ferreira *et al.*, 2011).

Here we take advantage of the peculiar situation of the brown hare, *L. europaeus*, to further tackle this question. In the Iberian Peninsula, this species is restricted to the Pyrenean foothills, but has a broad distribution north of the Pyrenees. This species likely invaded Iberia only when it colonised Western Europe (Stamatis *et al.*, 2009) after the last glacial maximum, a period characterised by major range changes of numerous European taxa promoted by deglaciation (Hewitt, 2000). Iberian populations of this species harbour very high frequencies of mtDNA of *L. timidus* origin, which appears almost fixed (Melo-Ferreira *et al.*, 2005; Alves *et al.*, 2008). This is likely to result from the colonisation of Iberia by *L. europaeus* and its replacement of a resident species that harboured *timidus* mtDNA. Such a species could have been either *L. timidus* if it was still present when *L. europaeus* arrived (which is uncertain) or *L. granatensis* if it already had high frequencies of *timidus* mtDNA, which is plausible. *L. castroviejoi* is unlikely to have been the donor of *timidus* mtDNA to *L. europaeus* because although it is fixed for *timidus*-type mtDNA, its most frequent mtDNA lineage is clearly distinct from those found in *L. europaeus* (that resemble more those in *L. granatensis*; Melo-Ferreira *et al.*, 2007, 2012). Furthermore, in a survey of diagnostic SNPs at 10 autosomal loci, Melo-Ferreira *et al.* (2009) found sporadic evidence of introgression from *L. timidus* into *L. granatensis*, but none into *L. europaeus*. However, there was some evidence of nuclear introgression from *L. granatensis* into *L. europaeus* (contradicting previous suggestions that these species did not hybridise; Estonba *et al.*, 2006), which may indicate that *L. europaeus* replaced *L. granatensis* when entering Iberia and invading the Pyrenean foothills. What makes the situation interesting for the question we address here is thus that the present zone of contact between the two species is parallel to the likely East–West direction of invasion (the distribution of *L. europaeus* in Iberia being restricted to a narrow strip bordered to the north by either the Pyrenees or the ocean, this must have been the major direction of colonisation). The genetic makeup of the *L. granatensis* populations south of the present contact zone should therefore reflect to a certain extent that of the populations that existed a little further north before they were replaced by *L. europaeus*. If hybridisation occurred repeatedly at the front of invasion, populations sampled across the contact zone should resemble each other more than populations sampled along the zone on either side of it. Such a pattern would not be expected if introgression had occurred rarely and only at the beginning of the invasion process. If introgression was restricted to mtDNA, this expected pattern should be found for mtDNA but not for nuclear markers, which should in fact show the reverse pattern: greater differentiation across the contact zone than along it. We therefore sampled pairs of populations across the contact zone between *L. europaeus* and *L. granatensis* and measured genetic differentiation using mtDNA and nuclear markers. We found the contrasted pattern between the two types of markers that sustains the hypothesis of recurrent hybridisation during invasion. This study also characterises for the first time not only past but also present exchanges among these two species. Finally, we provide evidence for a climatic contrast between the species ranges in our study area, which suggests a role for ecology in their past and present interactions.

MATERIALS AND METHODS

Sampling and microsatellite genotyping

A total of 342 hare tissue samples (194 *L. granatensis*, 109 *L. europaeus* and 39 *L. timidus*) were collected from several localities in Europe (Figure 1, Table 1). Three pairs of populations were sampled on opposite sides of the contact zone between *L. granatensis* and *L. europaeus* in Northern Iberia (ALA1–ALA2, NAV1–NAV2 and ZAR–JAC; see Figure 1). The other populations sampled served as parental populations to improve resolution in the assessment of admixture in the contact zone. They were broadly distributed in Iberia for *L. granatensis* and from Central Europe for *L. europaeus* (Figure 1). Two sampling sites were surveyed for *L. timidus*, that in the Italian Alps represent the present southernmost distribution of the species.

Total genomic DNA was extracted from frozen liver or ear tissue using a standard high-salt protocol. A set of six microsatellite loci was chosen from previously published works. Loci Sat2, Sat8, Sat12 (Mougel *et al.*, 1997) and INRACCDDv358 (Chantry-Darmon *et al.*, 2005) were originally developed for the European rabbit (*Oryctolagus cuniculus*), also a member of Leporidae, while Lsa2 (Kryger *et al.*, 2002) was specifically developed for hares and Sol30Le was adapted for hares from a rabbit-specific locus (Fickel *et al.*, 1999). All loci have dinucleotide repeat motifs except Sat12, which has a tetranucleotide motif. The microsatellites were PCR–amplified using 0.25 ng of genomic DNA per reaction, with an initial denaturation step of 3 min at 94 °C, followed by 30 cycles of 30 s at 94 °C, 30 s at 40–58 °C (see Supplementary Table S1) and 30 s at 72 °C. A final 15-min elongation step at 72 °C was applied. Fluorescently labelled primers allowed detection of the PCR fragments on an ABI PRISM 3130 automated sequencer (Applied Biosystems, Foster City, CA, USA). To validate the allele calling, which was done with GeneMapper Software v3.7 (Applied Biosystems), control individuals were included in every run and a randomly chosen ~15% portion of the data set was repeated.

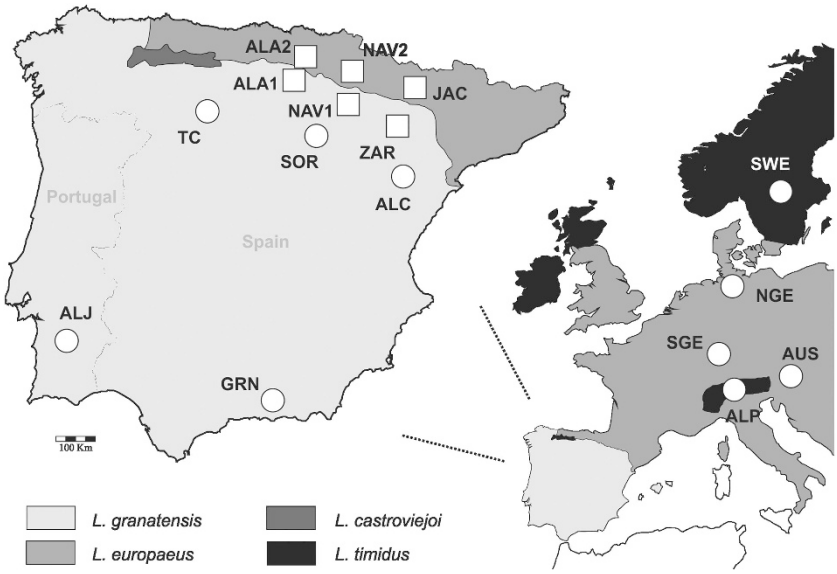

Figure 1 Geographic distribution of hares in Western Europe and in the Iberian Peninsula, and localities sampled in this study (see codes and sample sizes in Table 1). Squares indicate populations sampled close to the contact zone and circles putative parental populations of each species.

Table 1 Number of specimens analysed for the studied molecular markers and absolute frequencies of the mtDNA (*cytochrome b*) and Y-chromosome (*Sry*) lineages identified in the *L. granatensis* and *L. europaeus* specimens from Álava, Spain

Spp	*Code*	*Locality*	*Micros.*	*mtDNA*				*X chromosome*				*Y Chromosome*		
				Sequences[a]	*PCR–RFLP*[b]			*Sequences*				*PCR–RFLP*[c]		
				tim	*gra*	*eur*	*tim*	*Phka2*[d]	*Smcx*	*Msn*[e]	*Hprt1*	*gra*	*eur*	*tim*
gra	ALJ	Aljustrel, Portugal	19											
	GRN	Granada, Spain	20											
	ALC	Alcañiz, Spain	16											
	SOR	Soria, Spain	13											
	TC	Tierra de Campos, Spain	11											
	ZAR	Zaragoza, Spain	41	30										
	NAV1	Navarra, Spain	28	22										
	ALA1	Álava, Spain	46	13	34	0	14	28	33	36	17	25	0	0
eur	ALA2	Álava, Spain	51	22	17	2	34	32	29	31	25	0	9	0
	NAV2	Navarra, Spain	7	6										
	JAC	Jaca, Spain	11	7										
	SGE	Southern Germany	8											
	NGE	Northern Germany	14											
	AUS	Austria	18											
tim	ALP	Italian Alps	20					3	1	3	1			
	SWE	Sweden	19					7	2	4	2			
		Total	342	100	51	2	48	70	65	74	45	25	9	0

Abbreviations: micros., microsatellites; spp., sampled species (*gra*: *L. granatensis*; *eur*: *L. europaeus*; *tim*: *L. timidus*).
Species codes in mtDNA and Y chromosome data indicate the origin of detected lineages.
Codes of sampling localities are the same as in Figure 1
[a]Data from the study by Melo-Ferreira *et al.* (2007).
[b]Data from this work (30 specimens) and from the study by Melo-Ferreira *et al.* (2005) (76 specimens).
[c]Data from the study by Melo-Ferreira *et al.* (2009). See Supplementary Tables S2 and S3 for a detailed description of the analysed mtDNA and X-chromosome data.
[d]Sequences of 14 of these specimens were from the study by Melo-Ferreira *et al.* (2011).
[e]Sequences of six of these specimens were from the study by Melo-Ferreira *et al.* (2009).

Genotype data analysis

Standard measures of genetic diversity such as the total number of alleles per sample, mean number of alleles per locus, observed (H_o) and non-biased expected (H_e) heterozygosity were calculated using the programme Genetix (Belkhir *et al.*, 1996–2004). Linkage disequilibrium between pairs of loci and Hardy–Weinberg equilibrium over all loci across all samples were estimated using Genepop (Raymond and Rousset, 1995). Differentiation between species and between pairs of populations was assessed by F_{ST} estimates using the same software.

In order to assess the ability of the microsatellite set to discriminate the three species, a non-parametric factorial correspondence analysis was performed using Genetix. In addition, the admixture model implemented in

STRUCTURE (Pritchard *et al.*, 2000) was applied both to the complete data set and to another composed only by *L. granatensis* and *L. europaeus* samples. This method allowed both determining the ability of the microsatellite markers to separate the species and pinpointing admixed individuals. Five replicate runs of STRUCTURE, with 500 000 steps after a burn-in period of 100 000, were performed for each data set. No information about putative parental population was given *a priori*.

Evidence of admixture was in addition assessed using NewHybrids (Anderson and Thompson, 2002) in the data set composed only of *L. granatensis* and *L. europaeus*. NewHybrids is a model-based Bayesian software that assigns individuals to genotypic classes of parentals and several hybrid generations. Six classes were used here: pure *L. granatensis*, pure *L. europaeus*, F1, F2, backcross with *L. granatensis* and backcross with *L. europaeus*. Five replicate runs of 500 000 sweeps after 100 000 generations of burn-in were performed using a Jeffreys prior for both π and Θ.

Finally, microsatellite data collected from specimens sampled near the contact zone in Álava (Table 1) were analysed in a mixed genetic and spatial framework. This was performed using Geneland (Guillot *et al.*, 2005), which was designed to detect population structure using geo-referenced individual multi-locus genetic data. Further, mean minimum annual temperatures (measured in °C) and mean annual precipitation (measured in mm) of the sampling locations of *L. granatensis* and *L. europaeus* in Álava (ALA1 and ALA2) were downloaded from the *WorldClim* website (www.worldclim.org; 1×1 km resolution; Hijmans *et al.*, 2005). Differences between the *L. granatensis* and *L. europaeus* sampling locations for these measures were tested using the Mann–Whitney *U*-test.

mtDNA and microsatellite differentiation in the contact zone

To estimate levels of differentiation of the *L. timidus* mtDNA type along and across the contact zone between *L. granatensis* and *L. europaeus* we used previously published sequences from the three pairs of populations (ALA1-ALA2, NAV1-NAV2, ZAR-JAC; see Figure 1 and Table 1; Melo-Ferreira *et al.*, 2007). Differentiation was estimated both for the mtDNA and microsatellite data using the hierarchical analysis of molecular variance approach implemented in Arlequin 3.5 (Excoffier and Lischer, 2010). Populations were partitioned according to species.

mtDNA typing, X-chromosome loci sequencing and Y-linked data

In order to better characterise genetic exchanges in the contact zone, we studied the samples from the province of Álava (ALA1 and ALA2 in Figure 1) for additional markers: for mtDNA (PCR–RFLP typing), the X chromosome (sequences of four loci) and the Y chromosome (PCR–RFLP from a previous study; Melo-Ferreira *et al.*, 2009). A previous PCR–RFLP typing of the mtDNA lineage of 71 individuals (Melo-Ferreira *et al.*, 2005) was here extended to a total of 101 specimens using the same methodology (see primers in Supplementary Table S1, this assay allows recognising the three species-specific mtDNA lineages). Males were identified using an approach similar to that in the study by Wallner *et al.* (2001) and combining a Y-specific primer pair (with *Sry* primers adapted here, see Supplementary Table S1) with an autosomal specific one as internal control. *Sry*-negative samples for this duplex PCR were further assayed with the *Sry* primers alone, to detect potential false negatives that could have resulted from competition between primers during the initial duplex PCR.

Sequencing of loci located on the X chromosome was either an important extension of previous work (in the cases of Phka2 and Msn; Melo-Ferreira *et al.*, 2009, 2011) or performed *de novo* (in the case of *Smcx* and *Hprt1*) (see Supplementary Tables S2 and S3). These genes were chosen based on their positions along the X chromosome (determined in the European rabbit and assuming synteny with hares, which is vastly observed for the autosomes) (Robinson *et al.*, 2002): *Phka2* and *Hprt1* lie close to the telomeres, where recombination is expected to be high, and *Smcx* and *Msn* close to the centromere where recombination is expected to be low. A combination of newly and previously designed primers (Geraldes *et al.*, 2006; Melo-Ferreira *et al.*, 2009, 2011; see Supplementary Table S1) served to PCR-amplify these X fragments. PCR cycling profile consisted of an initial denaturation step at 94 °C for 15 min, 35 cycles of 30 s at 94 °C, 45 s at various annealing temperatures (Supplementary Table S1) and 90–120 s at 72 °C, followed by a final extension at 60 °C for 20 min. Amplified fragments were sequenced in one or both directions (primers listed in Supplementary Table S1) following the ABI PRISM BigDye Terminator Cycle Sequencing 3.1 standard protocol and using an ABI PRISM 3130 sequencer (Applied Biosystems).

X-linked sequence data analysis

Sequences of the four X-linked markers were edited, aligned, assembled and visually inspected using Bioedit 7.0.9.0 (Hall, 1999). Levels of genetic diversity were assessed by calculating several summary statistics using DnaSP 5.10 (Librado and Rozas, 2009), including the number of segregating sites (S), two estimators of nucleotide diversity, π and θ, and the nucleotide distance (D_{xy}) to an outgroup (the European wild rabbit, *Oryctolagus cuniculus*). The same software was used to test for deviations from the neutral expectations under stable demography using Tajima's D (Tajima, 1989) and Fu's F_S (Fu, 1997) statistics as well as the intra-locus population recombination parameter γ (Hey and Wakeley, 1997).

Genetic differentiation between *L. granatensis* and *L. europaeus* was estimated using F_{ST}, the average pairwise nucleotide divergence (D_{xy}), and the number of fixed differences, also using DnaSP 5.10 (Librado and Rozas, 2009). Finally, median-joining networks were constructed using Network 4.600 (Bandelt *et al.*, 1999) to represent genealogical relationships among haplotypes.

RESULTS

Species distinction and inferences of hybridisation using microsatellites

We included in our analysis of microsatellite differentiation along the contact zone between *L. europaeus* and *L. granatensis* some reference populations far away from this zone (Figure 1 for the distribution of samples), but also some *L. timidus* samples because of the known mtDNA *timidus* contribution in this region in both species. Considering all 342 genotyped individuals from the three species, 73 alleles were found at the six microsatellite loci, with 5–20 alleles per locus (Supplementary Table S4; see distribution of allelic frequencies per locus in Supplementary Figure S1). The mean number of alleles per locus, as well as H_e and H_o were in general lower in *L. granatensis* than in *L. europaeus* or *L. timidus*, which displayed similar values of diversity (see diversity per population in Supplementary Tables S5 and S6). Across all populations, only three population–locus tests suggested significant deviations from Hardy–Weinberg proportions after Bonferroni correction, and we found no evidence of linkage disequilibrium among loci.

The F_{ST} estimates showed much higher levels of inter- than intra-specific differentiation (Supplementary Table S7). Accordingly, the three species appeared as separate clusters in both 2D-AFC (Supplementary Figure S2) and STRUCTURE (Supplementary Figure S3) results. In the STRUCTURE analysis of the three species ($K = 3$), 12 individuals fell below the defined threshold of 80% of assignment to a given species, and could thus be of mixed ancestry (Supplementary Figure S3): one *L. timidus* specimen from the Alps (admixed with *L. europaeus*), two *L. europaeus* specimens from Austria (admixed with *L. timidus*), three *L. europaeus* from Iberia (two admixed with *L. timidus* and one with *L. granatensis*) and six *L. granatensis* (five admixed with *L. europaeus* and one almost evenly assigned to the three species).

Focusing only on admixture between *L. granatensis* and *L. europaeus* and after removing the specimens with suggestions of admixture with *L. timidus,* we ran STRUCTURE again but with $K = 2$, which returned six individuals with evidence of admixture between *L. granatensis* and *L. europaeus* (Figure 2). All these specimens were collected in the Spanish province of Álava, five in the area of distribution of *L. granatensis* and one in that of *L. europaeus*. These

results were almost totally supported by those of NewHybrids, the only exception being one individual from the *L. granatensis* sample of Álava, which was assigned with high posterior probability to parental *L. granatensis* (Figure 2). The remaining five individuals had a posterior probability of assignment to the non-F1 hybrid classes of ~0.50 or more. Two additional *L. europaeus* specimens from Álava and Jaca had similarly high posterior probabilities of assignment to non-F1 hybrid classes but had not been identified as admixed by STRUCTURE (data not shown).

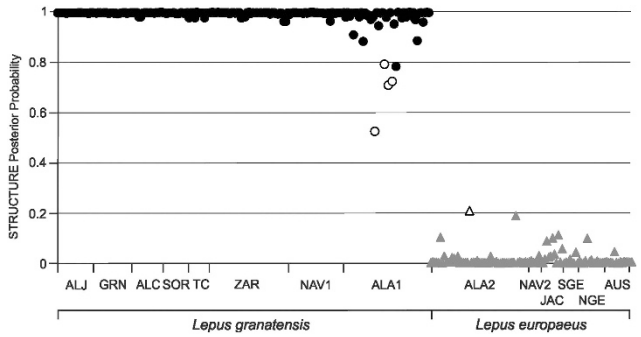

Figure 2 Posterior probabilities of assignment to *L. granatensis* of *L. granatensis* (circles) and *L. europaeus* (triangles) specimens sampled in the populations indicated along the *x* axis (check codes in Figure 1 and Table 1) inferred using STRUCTURE from microsatellite variation. Open symbols indicate specimens that were identified as admixed both in the STRUCTURE and NewHybrids analyses.

Table 2 Analysis of molecular variance of mtDNA and microsatellites on three pairs of populations sampled along the contact zone between *L. granatensis* and *L. europaeus* and partitioned according to species

	Fixation indices			*Percentage of variance*		
	Φ_{SC}	Φ_{ST}	Φ_{CT}	*AG*	*APWG*	*WP*
mtDNA	0.273	0.294	−0.030	−3.0	30.3	72.7
Microsatellites	0.052	0.363	0.328	32.8	3.5	63.7

Abbreviations: AG, among groups; APWG, among populations within groups; WP, within populations.
See Figure 1 for the composition of each group.

mtDNA and microsatellite differentiation along and across the contact zone

Using only the three pairs of populations across the contact zone between *L. granatensis* and *L. europaeus* (pairs ALA1–ALA2, NAV1–NAV2 and JAC–ZAR; Figure 1) we compared the results of an analysis of molecular variance considering the species and population levels. For mtDNA, we only considered variants of *L. timidus* origin in both species (which were the majority in the sequence data of Melo-Ferreira *et al.*, 2007 used here) for these analyses to make sense. Table 2 shows that for mtDNA differentiation among species is very low and non-significant, as opposed to high and significant differentiation among populations of the same species, that is, of the same order as overall between population differentiation (see also the distribution of major lineages of *timidus* origin in Supplementary Figure S4). The reverse pattern is seen for microsatellites, with low differentiation among populations of the same species, and comparatively high differentiation between species (although the former is significantly different from 0 but not the latter after the permutation tests). Therefore, these combined results conform to the prediction we made in the case of repeated hybridisation of *L. europaeus* during its likely East–West progression in a territory occupied by *L. granatensis*.

Genetic and geographic analysis of the contact zone

As admixture was only detected in the province of Álava using microsatellites, we further focused on this area to study in more detail contemporaneous genetic exchanges between these species. The results of an analysis of the microsatellite data with Geneland, which takes into account the geographic location of samples, point to a sharp genetic discontinuity coinciding with a ridge of the Sierra de Cantabria, which partitions the samples according to their morphological assignation (Figure 3). The analyses of annual temperature and precipitation in the two regions thus partitioned suggest that the north is significantly wetter and colder, and the south hotter and drier (Mann–Whitney *U*-test, $P = 0.046$ for mean of minimum annual temperatures, $P < 0.001$ for mean annual precipitation; see detailed information in Supplementary Table S2).

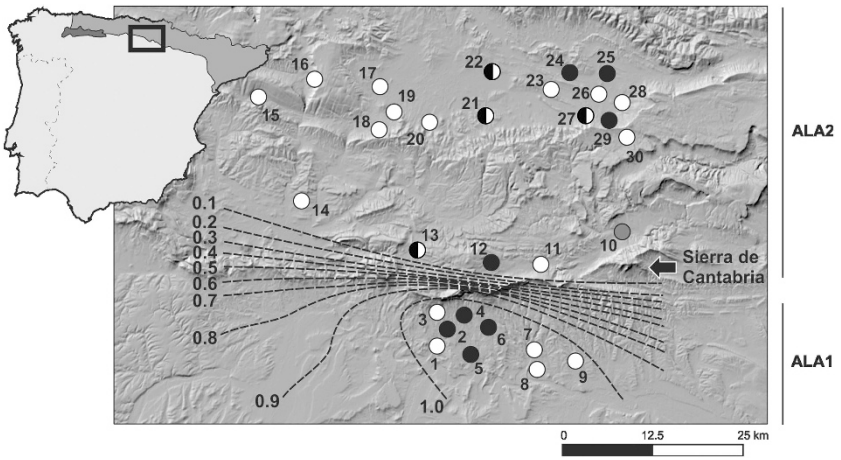

Figure 3 Hillshaded map of the region of Álava, Spain (location indicated by box on the map of the Iberian Peninsula). Circles indicate sampling locations and their colours the mtDNA haplotype detected in each locality: white—*L. timidus*, black—*L. granatensis* and grey—*L. europaeus* (coordinates of sampling localities and sample sizes in Supplementary Table S2). Dashed lines indicate the posterior probabilities of assignment to *L. granatensis* inferred using Geneland.

The distribution of mtDNA types (assigned to each of the three species by PCR–RFLP) is also shown on Figure 3. In the territory of *L. granatensis* as defined by the Geneland analysis, both the *granatensis* and *timidus* mtDNA were found, with a predominance of the former (34 out of 48), in keeping with the earlier descriptions by Melo-Ferreira *et al.* (2005) based on PCR–RFLP data but a more limited sample (Table 1; Figure 3). In the *L. europaeus* range, the *timidus* lineage prevailed (34 out of 53) and the *europaeus* lineage was rare (only 2), in keeping with the results of the study by Melo-Ferreira *et al.* (2005). However, contrary to these previous results, we found relatively high frequencies of the *granatensis* lineage (17 out of 53, Table 1; Figure 3). The distribution of these mtDNA lineages in Álava does not show any pattern coinciding with the microsatellite discontinuity across the mountain ridge (Figure 3), and the high frequency of *granatensis* in *europaeus* territory contrasts with the high microsatellite differentiation and the rarity of admixed genotypes detected. This reinforces the observation of less mtDNA than microsatellite differentiation across the contact zone that was pointed by the analyses of molecular variance (see above).

Sequences of four X-linked loci (fragments of genes *Phka2*, *Smcx*, *Msn* and *Hprt1*) were analysed in up to 36 individuals of *L. granatensis* and 32 individuals of *L. europaeus* from Álava, and also for up to 10 *L. timidus* (Table 1; Supplementary Table S3). Most analysed specimens were males, which allowed the direct recovery of haplotypes. The few genotyped females (Supplementary Tables S2 and S3) were found to either be homozygous for all SNPs or to present a single SNP at any given locus, which also allowed recovering the segregating haplotypes. The data set contained a total of 286 sequences (77 for *Phka2*, 75 for *Smcx*, 82 for *Msn* and 52 for *Hprt1*; 2 sequences per female), of which 22 were from previous studies (Melo-Ferreira *et al.*, 2009, 2011; see Supplementary Table S2, S3 and S8; GenBank Accession Numbers of the new sequences: KF564322–KF564553). Contrary to what we observed for microsatellites, diversity was higher in *L. granatensis* than in *L. europaeus* (Supplementary Table S8). In general, genetic diversity was higher at the two distal loci (*Phka2*, *Hprt1*) than at the two proximal (*Msn* and *Smcx*). The ratio θ/Dxy (Supplementary Table S8) was generally higher for the telomeric than centromeric genes, which suggests that differences in diversity do not reflect differences in mutation rates, but could result from, for example, different recombination rates, low recombining regions being more affected by linkage to selected loci. Equilibrium and neutrality tests could not be performed for all loci in both species due to the absence of polymorphism at some markers, but were generally found not to be significant (Supplementary Table S8). Levels of differentiation and divergence between *L. granatensis* and *L. europaeus* also differed between the two X-chromosome regions, F_{ST} being higher and D_{xy} lower proximally (Supplementary Table S8). Phylogenetic analyses using several autosomal loci had suggested that *L. granatensis* and *L. timidus* were more closely related as compared with *L. europaeus* (Melo-Ferreira *et al.*, 2012). Our results are compatible with this in all X loci except *Phka2*. However, in all cases *europaeus* haplotypes appear very different from those of the two other species, and no shared haplotypes were found between *L. granatensis* and *L. europaeus* at any locus (Figure 4). No statistical evidence of intra-locus recombination was found in our data sets (Supplementary Table S8). However, a more detailed analysis of the *Phka2* locus (Melo-Ferreira *et al.*, 2011 and unpublished results) has shown evidence that some of the haplotypes found in *L. granatensis* are recombinant between *granatensis* and *timidus* haplotypes (haplotypes G1–G3 in Figure 4a). However, we find no evidence here that these chimeric haplotypes, which are frequent everywhere in the *L. granatensis* range, including close to this contact zone (Melo-Ferreira *et al.*, 2011 and this study), exist in *L. europaeus*. Finally, a previous study using samples from the province of Álava had not detected any exchange of Y chromosome either between the three species (Melo-Ferreira *et al.*, 2009; Table 1).

DISCUSSION

The North of the Iberian Peninsula has been an arena for reticulate evolution among different species of hares at least since the last glacial period and presumably during more ancient periods as well (Melo-Ferreira *et al.*, 2005, 2009, 2012). Understanding the origin of the apportionment of genetic diversity among the extant hare species implies understanding the influence of past range shifts in relation to climate changes accompanied by species interactions and hybridisation, including with a locally extinct species. It also implies understanding the influence of present exchanges across extant secondary hybrid zones. The fact that the past interaction and hybridisation with the now extinct *L. timidus* has affected the three species now thriving in Iberia complicates the analysis of ongoing gene flow using markers for which diagnosticity is thus potentially compromised (Alves *et al.*, 2006). However, previous species-wide studies with several autosomal

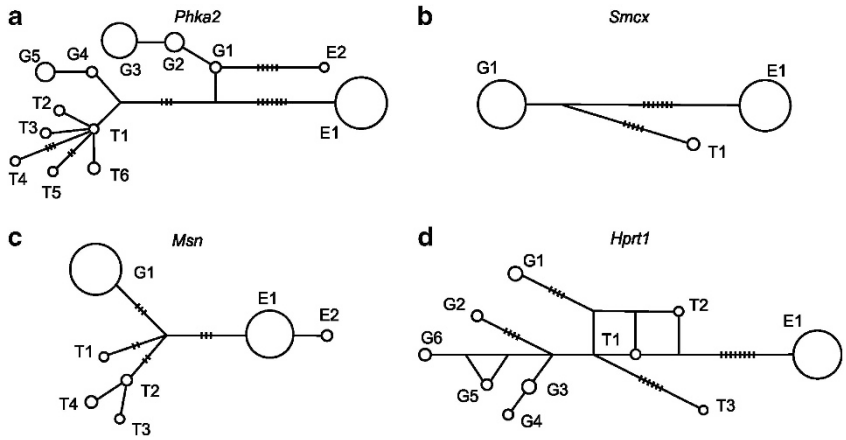

Figure 4 Median-joining networks of the sequenced X-linked loci: (**a**) *Phka2*, (**b**) *Smcx*, (**c**) *Msn* and (**d**) *Hprt1*. The first letter of each haplotype indicates the species where it was detected: G—*L. granatensis*, E—*L. europaeus* and T—*L. timidus*. Localities and sample sizes are indicated in Table 1. Dashes on the branches indicate the number of mutations if higher than one. Haplotypes' areas are proportional to their frequency.

markers have shown that reticulation left large scale traces only for mtDNA, nuclear introgression being generally only sporadic (Melo-Ferreira *et al.*, 2009, 2012). The only notable exception is an X-chromosome fragment that was shown to have largely spread from *L. timidus* into the full range of *L. granatensis* (Melo-Ferreira *et al.*, 2011). Theoretical predictions have provided a potential explanation for this contrast between genomic regions, suggesting that it results from the combination of demographic processes during range replacement with differences of sex-linked transmission between genomic regions and sex-linked differences in migration behaviour. However, the precise dynamics of the corresponding process, including the relative influences of hybridisation frequency, drift intensity and demographic expansion rate, is well modelled but poorly documented in real life, even if it can explain numerous cases of mtDNA introgression (Petit and Excoffier, 2009). Understanding the conditions under which the phenomenon occurred may be of interest to reconstruct past history and evolution. If introgression resulted from rare hybridisation accidents associated with extreme stochasticity, followed by allele surfing on high waves, such observations would remain somewhat anecdotal, unless other sources of information indicated a secondary impact on genetic evolution and genome coadaptation. However, in the case of hares, the phenomenon has occurred in the three species that inhabit Iberia, and even apparently repeatedly in *L. castroviejoi* (Melo-Ferreira *et al.*, 2012). This suggests that hybridisation has been systematic rather than anecdotal during climate-driven range shifts, and that it must thus have also occurred repeatedly during the expansion of any given species. If this was true, then the present distribution of introgressed alleles would have kept to a certain extent the memory of past species distribution and variation before range shifts associated with major environmental changes. Here we took advantage of the existence of a contact zone between two species that evolved independently and colonised the area through independent routes to test the hypothesis that mtDNA variation witnesses past population structure in the face of invasion by two species.

Limited genetic admixture in the contact zone between *L. granatensis* and *L. europaeus*

The microsatellites used in this work allowed a clear separation of the three hare species. Even including samples from the contact zone, the specimens were attributed with high probabilities to the species they had been classified into based on evident morphological characters (the only exception among the 342 studied specimens was one sampled in the Alps, possibly erroneously identified as belonging to *L. timidus*; Supplementary Figure S3). Signs of autosomal introgression from *L. timidus* had been previously estimated to be rare in the Iberian species based on diagnostic SNPs (Melo-Ferreira *et al.*, 2009). In keeping, we assessed little putative contribution of *L. timidus* in the Iberian Peninsula with microsatellites (Supplementary Figure S3). However, given the mode and rate of mutation of microsatellites, and the general absence of fully diagnostic loci, our set of six autosomal loci was expected to be particularly suitable to assess recent gene flow between neighbouring populations rather than ancient gene flow. Therefore, it is at this point difficult to assess whether the inference of *L. timidus* genetic contribution results from direct admixture with *L. timidus* (for example on the way to colonise Iberia) or from putative background noise due to genetic admixture with an unsampled but well-differentiated population (for example, *L. castroviejoi*). The admixture found in the two Austrian specimens may eventually result from recent hybridisation between *L. timidus* and *L. europaeus* closer to the Alps, as previously suggested (Suchentrunk *et al.*, 2005; Melo-Ferreira *et al.*, 2009).

Evidence of admixture between *L. granatensis* and *L. europaeus* was found only in Álava in northern Spain (ALA1 and ALA2 in Figure 1), the localities closest to the contact zone between the two species. The four *L. granatensis* specimens and one *L. europaeus* with evidence of admixture were inferred to be backcrosses, suggesting that hybrids between these species are fertile, at least to a certain degree. However, no exchange could be detected for the sex chromosome markers, which may be an indication that they are implicated in hybrid unfitness, as is often the case (Presgraves, 2008). Even an X marker (*Phka2*), which had previously shown to have extensively introgressed from *L. timidus* into *L. granatensis* (Melo-Ferreira *et al.*, 2011), did not show any evidence of gene flow from either *L. timidus* or *L. granatensis* into *L. europaeus*.

Overall, the contact between *L. granatensis* and *L. europaeus* appears to be a zone of little exchange between the species, with evidence of sporadic gene flow, but no real hybrid population. The fine scale study we performed in Álava suggests that the two species have distinct ecological preferences, which could account for their non-overlapping distributions and contribute to impede gene flow. It may also explain the success of the past invasion of *L. europaeus*, into an area where it would have been better adapted than *L. granatensis*. Although the analysis of habitat differentiation was here performed at a small geographical scale and using a limited number of variables, a strong habitat dependence of the two species has been inferred by ecological modelling (Acevedo *et al.*, 2012a,b), which suggests that habitat is likely a major determinant of species ranges, contributing to the maintenance of species segregation, as is often observed in secondary contact zones (Sexton *et al.*, 2009). These ecological modelling studies also suggest that the ongoing climate change will likely induce an expansion of *L. granatensis* towards the north and a retraction of *L. europaeus*, which may have implications for the management of these game species (Acevedo *et al.*, 2012a).

mtDNA differentiation is independent of species barriers

The most striking result of our study is the lack of mtDNA differentiation across the contact zone between *L. europaeus* and *L. granatensis* (in comparison to substantial differentiation among populations of the same species) and its contrast with the sharp differentiation for nuclear genes (Table 2). Note that this resemblance across the contact zone prevails whether mtDNA is of *L. granatensis* origin (high prevalence in both species in Álava; see Table 1) or of *L. timidus* origin (results of the analyses of molecular variance between species; Table 2). Such resemblance is hardly explained by gene flow across the contact zone, which we have shown to be extremely limited, but must rather reflect mtDNA diversity that existed before the two species entered into contact, that is, before *L. europaeus* entered Iberia. The fact that *granatensis* mtDNA is found at high frequencies in *L. europaeus* in Álava is a strong indication that *L. granatensis* rather than *L. timidus* was present in more northern Iberian latitudes before it was replaced by *L. europaeus*. Previous analyses of nuclear species-diagnostic SNPs had failed to detect any trace of *L. timidus* genome in Iberian *L. europaeus* (Melo-Ferreira *et al.*, 2009), but the present study has suggested possible such cases in two specimens. It could be that *L. europaeus* hybridised with *L. timidus* before it entered Iberia (several such cases have been documented in present populations; Suchentrunk *et al.*, 2005; Thulin *et al.*, 2006). Alternatively, the populations it replaced in Iberia could have been hybrids between *L. timidus* and *L. granatensis*, which is plausible if the replacement of *L. timidus* by *L. granatensis* was still

incomplete when *L. europaeus* arrived. Many more markers would be needed to eventually solve this question, but our present conclusions hold whatever was the exact composition of the hare populations that *L. europaeus* replaced.

CONCLUSION

Taking advantage of the favourable geographical setting of the interaction between *L. europaeus* and *L. granatensis*, we have demonstrated that repeated hybridisation along the invasion front was a major determinant of the massive mtDNA introgression into *L. europaeus*. The same is likely to be true for the two other species of Iberia, which provides a plausible explanation for the systematic occurrence of the phenomenon. The mtDNA variability presently found in Northern Iberia thus reflects to a certain extent the diversity that was present in *L. timidus* before the major species range shifts that led the three other species to occupy the region. The home-loving boreal mitochondrial genome therefore survived several alien invasions in Northern Iberia and became a stowaway successively in two different species (*L. granatensis* followed by *L. europaeus*), and apparently also twice in the same species (*L. castroviejoi*). Note though that the clandestineness of this passenger would deserve critical examination, because its high prevalence could have influenced the evolution and adaptation of its carriers. As hybrid zones are often established after species range shifts, mtDNA may often mark ancient species distribution rather than current gene flow across a hybrid zone stabilised after a major environmental change.

DATA ARCHIVING

Sequence data are deposited in GenBank: accession numbers KF564322–KF564553. Genotype data and final sequence alignments are deposited in Dryad: doi:10.5061/dryad.qj864.

CONFLICT OF INTEREST

The authors declare no conflict of interest.

ACKNOWLEDGEMENTS

This work was partially supported by FEDER (Fundo Europeu de Desenvolvimento Regional) funds through the Programa Operacional Factores de Competitividade (COMPETE program; FCOMP-01-0124-FEDER-014266) and Portuguese national funds through the FCT (Fundação para a Ciência e a Tecnologia; PTDC/BIA-EVF/111931/2009 research project), by Programa Operacional Potencial Humano (POPH) – Quadro de Referência Estratégico Nacional (QREN) funds from the European Social Fund and Portuguese Ministério da Educação e Ciência (FCT, SFRH/BPD/43264/2008 post-doctoral grant to JM-F), and by project 'Genomics and Evolutionary Biology' co-financed by North Portugal Regional Operational Programme 2007/2013 (ON.2 – O Novo Norte), under the National Strategic Reference Framework (NSRF), through the European Regional Development Fund (ERDF). We thank Ibon Teletxea (ACCA—Asociación de Cotos de Caza de Álava) for providing most of the Álava samples, Christian Gortázar, Rafael Villafuerte, Diego Villanúa and Miguel Delibes-Mateos for their help in sampling the other Spanish populations, and Ettore Randi for providing the Italian *L. timidus* samples. We also thank Pedro Tarroso for his help with the hillshaded map of Álava and the climatic variables and Fernando Sequeira for valuable comments on the microsatellite analyses. Microsatellite genotyping and DNA sequencing was performed on the platform of LabEx CeMEB (Centre Méditerranéen de l'Environnement et de la Biodiversité, Montpellier) and in Centro de Testagem Molecular (CTM) of CIBIO.

Author contributions: JM-F, PB and PCA conceived the work. JM-F, HF and LF performed the laboratory work and data analyses. JM-F and PB drafted the manuscript. All authors interpreted the results, revised and approved the final version of the manuscript.

Acevedo P, Jiménez-Valverde A, Melo-Ferreira J, Real R, Alves PC (2012a). Parapatric species and the implications for climate change studies: a case study on hares in Europe. *Global Change Biol* **18**: 1509–1519.

Acevedo P, Melo-Ferreira J, Real R, Alves PC (2012b). Past, present and future distributions of an Iberian endemic, *Lepus granatensis*: ecological and evolutionary clues from species distribution models. *PLoS One* **7**: e51529.

Altuna J (1970). Hallazgo de una liebre artica (*Lepus timidus*) en el yacimiento prehistorico de Urtiga (Guipuzcoa). *Munibe* **22**: 165–168.

Alves PC, Ferrand N, Suchentrunk F, Harris DJ (2003). Ancient introgression of *Lepus timidus* mtDNA into *L. granatensis* and *L. europaeus* in the Iberian Peninsula. *Mol Phylogenet Evol* **27**: 70–80.

Alves PC, Harris DJ, Melo-Ferreira J, Branco M, Ferrand N, Suchentrunk F *et al*. (2006). Hares on thin ice: Introgression of mitochondrial DNA in hares and its implications for recent phylogenetic analyses. *Mol Phylogenet Evol* **40**: 640–641.

Alves PC, Melo-Ferreira J, Freitas H, Boursot P (2008). The ubiquitous mountain hare mitochondria: multiple introgressive hybridization in hares, genus *Lepus*. *Philos T R Soc B* **363**: 2831–2839.

Anderson EC, Thompson EA (2002). A model-based method for identifying species hybrids using multilocus genetic data. *Genetics* **160**: 1217–1229.

Bandelt HJ, Forster P, Rohl A (1999). Median-joining networks for inferring intraspecific phylogenies. *Mol Biol Evol* **16**: 37–48.

Belkhir K, Borsa P, Chikhi L, Raufaste N, Bonhomme F (1996–2004). *GENETIX 4.05, logiciel sous Windows TM pour la génétique des populations*. Laboratoire Génome, Populations, Interactions, CNRS UMR 5171, Université de Montpellier II: Montpellier (France).

Chantry-Darmon U, Urien C, Hayes H, Bertaud M, Chadi-Taourit S, Chardon P *et al*. (2005). Construction of a cytogenetically anchored microsatellite map in rabbit. *Mamm Genome* **16**: 442–459.

Currat M, Ruedi M, Petit RJ, Excoffier L (2008). The hidden side of invasions: massive introgression by local genes. *Evolution* **62**: 1908–1920.

Estonba A, Solis A, Iriondo M, Sanz-Martin MJ, Perez-Suarez G, Markov G *et al*. (2006). The genetic distinctiveness of the three Iberian hare species: *Lepus europaeus*, *L. granatensis*, and *L. castroviejoi*. *Mamm Biol* **71**: 52–59.

Excoffier L, Lischer HEL (2010). Arlequin suite ver 3.5: A new series of programs to perform population genetics analyses under Linux and Windows. *Mol Ecol Resour* **10**: 564–567.

Excoffier L, Ray N (2008). Surfing during population expansions promotes genetic revolutions and structuration. *Trends Ecol Evol* **23**: 347–351.

Fickel J, Lieckfeldt D, Pitra C (1999). Analysis of genetic diversity and structure in neighboring populations of the European brown hare (*Lepus europaeus*, Pallas 1778). *Zeitschrift Fur Jagdwissenschaft* **45**: 230–237.

Fu YX (1997). Statistical tests of neutrality of mutations against population growth, hitchhiking and background selection. *Genetics* **147**: 915–925.

Geraldes A, Ferrand N, Nachman MW (2006). Contrasting patterns of introgression at X-linked loci across the hybrid zone between subspecies of the European Rabbit (*Oryctolagus cuniculus*). *Genetics* **173**: 919–933.

Guillot G, Estoup A, Mortier F, Cosson JF (2005). A spatial statistical model for landscape genetics. *Genetics* **170**: 1261–1280.

Hall TA (1999). BioEdit: a user-friendly biological sequence alignment editor and analysis program for Windows 95/98/NT. *Nucl Acids Symp Ser* **41**: 95–98.

Hewitt GM (2000). The genetic legacy of the Quaternary ice ages. *Nature* **405**: 907–913.

Hey J, Wakeley J (1997). A coalescent estimator of the population recombination rate. *Genetics* **145**: 833–846.

Hijmans RJ, Cameron SE, Parra JL, G JP, Jarvis A (2005). Very high resolution interpolated climate surfaces for global land areas. *Int J Climatol* **25**: 1965–1978.

Kryger U, Robinson TJ, Bloomer P (2002). Isolation and characterization of six polymorphic microsatellite loci in South African hares (*Lepus saxatilis* F. Cuvier, 1823 and *Lepus capensis* Linnaeus, 1758). *Mol Ecol Notes* **2**: 422–424.

Librado P, Rozas J (2009). DnaSP v5: a software for comprehensive analysis of DNA polymorphism data. *Bioinformatics* **25**: 1451–1452.

Melo-Ferreira J, Alves PC, Freitas H, Ferrand N, Boursot P (2009). The genomic legacy from the extinct *Lepus timidus* to the three hare species of Iberia: contrast between mtDNA, sex chromosomes and autosomes. *Mol Ecol* **18**: 2643–2658.

Melo-Ferreira J, Alves PC, Rocha J, Ferrand N, Boursot P (2011). Interspecific X-chromosome and mitochondrial DNA introgression in the Iberian hare: selection or allele surfing? *Evolution* **65**: 1956–1968.

Melo-Ferreira J, Boursot P, Carneiro M, Esteves PJ, Farelo L, Alves PC (2012). Recurrent introgression of mitochondrial DNA among hares (*Lepus* spp.) revealed by species-tree inference and coalescent simulations. *Syst Biol* **61**: 367–381.

Melo-Ferreira J, Boursot P, Randi E, Kryukov A, Suchentrunk F, Ferrand N *et al*. (2007). The rise and fall of the mountain hare (*Lepus timidus*) during Pleistocene glaciations: expansion and retreat with hybridization in the Iberian Peninsula. *Mol Ecol* **16**: 605–618.

Melo-Ferreira J, Boursot P, Suchentrunk F, Ferrand N, Alves PC (2005). Invasion from the cold past: extensive introgression of mountain hare (*Lepus timidus*) mitochondrial DNA into three other hare species in northern Iberia. *Mol Ecol* **14**: 2459–2464.

Mougel F, Mounnolou JC, Monnerot M (1997). Nine polymorphic microsatellite loci in the rabbit, *Oryctolagus cuniculus*. *Anim Genet* **28**: 58–71.

Petit RJ, Excoffier L (2009). Gene flow and species delimitation. *Trends Ecol Evol* **24**: 386–393.

Presgraves DC (2008). Sex chromosomes and speciation in *Drosophila*. *Trends Genet* **24**: 336–343.

Pritchard JK, Stephens M, Donnelly P (2000). Inference of population structure using multilocus genotype data. *Genetics* **155**: 945–959.
Raymond M, Rousset F (1995). GENEPOP (version 1.2): a population genetics software for exact tests and ecumenicism. *J Hered* **86**: 248–249.
Robinson TJ, Yang F, Harrison WR (2002). Chromosome painting refines the history of genome evolution in hares and rabbits (order Lagomorpha). *Cytogenet Genome Res* **96**: 223–227.
Sexton JP, McIntyre PJ, Angert AL, Rice KJ (2009). Evolution and ecology of species range limits. *Annu Rev Ecol Evol Syst* **40**: 415–436.
Stamatis C, Suchentrunk F, Moutou KA, Giacometti M, Haerer G, Djan M *et al.* (2009). Phylogeography of the brown hare (*Lepus europaeus*) in Europe: a legacy of south-eastern Mediterranean refugia? *J Biogeogr* **36**: 515–528.
Suchentrunk F, Mamuris Z, Stamatis C, Ben Slimen H, Hackländer K, Haerer G *et al.* (2005). Introgressive hybridization in wild living mountain hares (*L. timidus varronis*) and brown hares (*L. europaeus*) and morphological consequences. *Mamm Biol* **70**:suppl 39–40.
Tajima F (1989). Statistical method for testing the neutral mutation hypothesis by DNA polymorphism. *Genetics* **123**: 585–595.
Thulin CG, Fang M, Averianov AO (2006). Introgression from *Lepus europaeus* to *L. timidus* in Russia revealed by mitochondrial single nucleotide polymorphisms and nuclear microsatellites. *Hereditas* **143**: 68–76.
Wallner B, Huber S, Achmann R (2001). Non-invasive PCR sexing of rabbits (*Oryctolagus cuniculus*) and hares (*Lepus europaeus*). *Mamm Biol* **66**: 190–192.

Supplementary Information accompanies this paper on Heredity website (http://www.nature.com/hdy)