# Vaccination against babesiosis using recombinant GPI-anchored proteins

Sarah Nathaly Wieser, Leonhard Schnittger, Monica Florin-Christensen, Stéphane Delbecq, Theo Schetters

Invited Review

# Vaccination against babesiosis using recombinant GPI-anchored proteins

**Sarah Nathaly Wieser[a], Leonhard Schnittger[a], Monica Florin-Christensen[a], Stephane Delbecq[b], Theo Schetters[b,c,*]**

[a]*Institute of Veterinary Pathobiology, National Institutes of Agricultural Technology (INTA)-National Research Council of Argentina (CONICET). Los Reseros y Nicolas Repetto, s/n, 1686 Hurlingham, Prov. Buenos Aires, Argentina*

[b]*Vaccination Anti-Parasitaire (VAP), University of Montpellier, France*

[c]*Department of Veterinary Tropical Diseases, Veterinary Faculty, University of Pretoria, South Africa*

*Corresponding author.

*E-mail address*: th.schetters@protactivity.com

Abstract

The increase in human babesiosis is of major concern to health authorities. In the USA, most of these cases are due to infections with *Babesia microti*, whereas in Europe *B. divergens* is the major cause of clinical disease in humans. Here we review the immunological and biological literature of glycosylphosphatidylinositol (GPI)-anchored merozoite proteins of human *Babesia* parasites with emphasis on their role in immunity, and provide some new bioinformatical information on *B. microti* GPI-Anchored Proteins (GPI-AP). Cattle can be vaccinated with soluble parasite antigens (SPA) of *Babesia divergens* that are released by the parasite during proliferation. The major component in SPA preparations appeared to be a 37 kDa merozoite surface protein that is anchored in the merozoite membrane by a GPI anchor. Animals could be protected by vaccination with the recombinant 37 kDa protein expressed in *Escherichia coli*, provided the protein had a hydrophobic terminal sequence. Based on this knowledge, a recombinant vaccine was developed against *Babesia canis* infection in dogs, successfully. In order to identify similar GPI-anchored proteins in *B. microti*, the genome was analysed. Here it is shown that *B. microti* encodes all proteins necessary for GPI assembly and its subsequent protein transfer. In addition, in total 21 genes encoding for GPI-anchored proteins were detected, some of which reacted particularly strongly with sera from *B. microti*-infected human patients. Reactivity of antibodies with GPI-anchored merozoite proteins appears to be dependent on the structural conformation of the molecule. It is suggested that the three-dimensional structure of the protein that is anchored in the membrane is different from that of the protein that has been shed from the merozoite surface. The significance of this protein's dynamics in parasite biology and immune evasion is discussed. Finally, we discuss

developments in tick and *Babesia* vaccine research, and the role such vaccines could play in the control of human babesiosis.

*Keywords*: *Babesia microti*; *Babesia divergens*; Recombinant vaccine; GPI anchors; Apicomplexa; Human babesiosis; Merozoite surface protein

## 1. Introduction

The incidence of clinical babesiosis in humans is increasing, which is of concern to health authorities (Vannier et al., 2015). A growing number of *Babesia* spp. has been associated with human infections, the majority of which are due to *Babesia microti* in the United States (USA) and *Babesia divergens* in Europe. Importantly, it has been shown that animals can be immunised against *B. divergens* infection using a vaccine based on the recombinant *B. divergens* antigen Bd37 (Delbecq et al., 2006). This antigen is a merozoite surface protein that is anchored to the membrane by a specific structure called glycosylphosphatidylinositol (GPI) anchor. It was later shown that a homologous GPI-anchored protein (GPI-AP) of *Babesia canis* successfully protected dogs against virulent challenge infection (Moubri et al., 2018). This holds promise for the development of vaccines against human babesiosis. Here we review the immunological and biological literature of GPI-anchored merozoite proteins of human *Babesia* parasites with emphasis on their role in immunity, and provide some new bioinformatical information on *B. microti* GPI-AP. In addition, we discuss developments in tick and *Babesia* vaccine research, and the role such vaccines could play in the control of human babesiosis.

## 2. Parasite antigens released during infection

Natural infection with *Babesia* parasites follows transmission by a tick bite. In order to feed successfully, ticks have developed a range of responses to counteract coagulation, inflammation and the onset of immunity (reviewed by Schetters, 2018). The environment of the biting site is anti-inflammatory, and due to the anti-coagulants that are injected with the tick saliva, there is free movement and a high density of red blood cells. Hence, at the

moment *Babesia* parasites are injected with tick saliva into a naive host, the environment at the injection site is favourable to them. The parasite rapidly invades an erythrocyte that subsequently enters the blood circulation (some parasites, however, can be taken up with the blood meal of the tick). This could be enough time to activate components of the innate humoral immune systems, but is less likely to be enough time for interactions with white blood cells. During the invasion process, however, the merozoite surface coat is shed and left outside the red blood cell where it interacts with the host defence mechanisms (Igarashi et al., 1988). The merozoite surface coat is a major constituent of supernatants of in vitro cultures of the parasite (soluble parasite antigens; SPA), which have been shown to induce protective immunity in a number of host-parasite models (Schetters and Montenegro-James, 1995). The molecules in SPA preparations are proteinaceous and have sugar moieties (sensitive to amylase), suggesting they are glycoproteins. Importantly, the antigenicity of the SPA preparations was lost after 2-mercaptoethanol treatment, which indicates that intact disulphide bonds implied in the structural organization of the molecule are critical (reviewed in Ristic and Kakoma, 1988).

## 3. Development of recombinant vaccines

The fact that animals could be protected by vaccination with *Babesia* antigens from supernatants of in vitro cultures of the parasite stimulated the search for immunoprotective moieties from such preparations (Timms et al., 1983). Fractionation of the supernatants of in vitro cultures of the human *B. divergens* parasite (strain Rouen) led to the discovery of a 37 kDa protein that was recognized by sera from humans, bovines and gerbils that were infected with *B. divergens* (Bd37; Précigout et al., 1991). The protein appeared to be a

merozoite surface protein, and metabolic labelling studies indicated that it was glycosylated and palmitoylated, indicative of a GPI-anchored surface protein (Carcy et al., 1995). After incubation with GPI-specific phospholipase D, a soluble, hydrophilic form of Bd37 was released from the merozoite surface in the supernatants of in vitro cultures of *B. divergens* (Delbecq et al., 2002). A monoclonal antibody that was generated in mice that were vaccinated with partially purified Bd37 protein, recognized the Bd37 antigen and was shown to confer protection in vivo (Précigout et al., 2004). Subsequently, the Bd37 gene could be cloned from an expressed sequence tag (EST) library and expressed in *Escherichia coli*. The recombinant glutathione S-transferase (GST) fusion protein was used to vaccinate gerbils. Results showed that gerbils were fully protected from a virulent *B. divergens* challenge infection (Hadj-Kaddour et al., 2007). Importantly, where vaccination with the native Bd37 protein from culture supernatants induced immunity that was largely strain-specific (Précigout et al., 1991), vaccination with the recombinant protein induced a broad spectrum of protection (Hadj-Kaddour et al., 2007). Additional studies suggested that induction of broad spectrum immunity depended on the structural conformation of the protein, which might be influenced by the addition of hydrophobic terminal peptide sequences to the core Bd37 protein (Delbecq et al., 2006, 2008). Using the knowledge acquired from the Bd37 vaccine project, a recombinant vaccine against *B. canis* for dogs was developed. The recombinant protein used was a 40 kDa merozoite surface protein of *B. canis* that has a predicted GPI-anchoring site. Vaccination of dogs with the recombinant protein induced immunity against virulent challenge infection (Moubri et al., 2018). These two examples suggest the feasibility of a more general strategy involving GPI-anchored

merozoite surface antigens to develop protective vaccines against other *Babesia* spp. including *B. microti*.

Information on the degree of polymorphism of *B. microti* GPI-anchored proteins is still missing. In the case of bovine *Babesia* spp., sequencing studies showed a variety of scenarios from high level of strain conservation, as in the case of *B. bovis* merozoite surface antigen 2c (MSA-2c) to a high level of polymorphism as is the case of *B. bigemina* gp45/55 (McElwain et al., 1991; Wilkowsky et al., 2003; Carcy et al., 2006). Interestingly, even in the case of moderate polymorphism, conservation among strains at the level of neutralization-sensitive B-cell epitopes has been shown (Suarez et al., 2000; Dominguez et al., 2010).

Despite the presence of conserved neutralization-sensitive B-cell epitopes in *B. bovis* GPI-anchored proteins, protection upon challenge using recombinant forms of some of these antigens has so far been unsuccessful. It could be that, similar to the situation with Bd37 of *B. divergens*, addition of hydrophobic terminal peptide sequences to the core protein induces conformational changes in the molecule, thus exposing the neutralization-sensitive epitopes. Clearly, similar studies and studies on delivery systems and immunomodulators that could elicit protective responses in the bovine host are much needed in *Babesia* vaccine development (reviewed in Florin-Christensen et al., 2014).

## 4. In silico prediction of the GPI synthesis pathway of *B. microti*

GPI has been shown to be abundantly present in the membranes of apicomplexan and kinetoplastid pathogenic protozoa such as *Plasmodium falciparum*, *Toxoplasma gondii*, *B. bovis*, *Trypanosoma brucei* and *Leishmania donovani* (Smith et al., 1997; Ferguson,

1999; Rodriguez et al., 2010). The molecule is present in free and protein-bound forms, and is comprised of a conserved core structure and variable moieties. The core structure is characterized by glucosamine linked to myo-inositol in position 1, and to the first of a chain of commonly three mannose residues in position 4 (Fig. 1). Myo-inositol can be linked to diacylglycerol, 1-alkyl-2-acylglycerol or ceramide, forming different kinds of inositol phospholipids. In the case of GPI anchors, the last mannose residue is conjugated via phosphoethanolamine to the C terminus of a protein. In addition to the different lipid moieties that can be bound to myo-inositol, the latter may or may not be acylated, and the number of sugar residues varies among different organisms (Ferguson et al., 2009). In *B. bovis*, the most abundant free GPI molecule has a more simple structure consisting of a chain of two mannose residues, N-glucosamine and a non-acylated inositol linked to diacylglycerol (Rodriguez et al., 2010). *Babesia bovis* protein-bound GPI molecules, as well as free and protein-bound GPIs of other piroplasmids, are yet to be structurally characterized.

All enzymes necessary for the assembly of man-man-GlcN-inositol-diacylglycerol, the main free GPI of *B. bovis*, have been identified in its in silico proteome (Rodriguez et al., 2010). To analyze if *B. microti* possesses the metabolic capacity to generate GPI, its proteome was searched for GPI biosynthetic enzymes orthologous with those described for *P. falciparum* and *B. bovis* (Delorenzi et al., 2002; Rodriguez et al., 2010). The results show that this parasite, which has the smallest genome among apicomplexans (Cornillot et al., 2012), encodes all proteins necessary for GPI assembly and its subsequent protein transfer (Table 1). Interestingly, the genomes of both *B. bovis* and *B. microti* encode phosphatidylinositol glycan anchor biosynthesis-W (PIG-W), the enzyme that catalyzes

acylation of myo-inositol, hence acylated inositol is likely present in the GPI molecules synthesized by these parasites. The differential sensitivity of the Bd37 GPI anchor to specific phospholipases C and D also indicates an acylated inositol in *B. divergens* (Delbecq et al., 2002). The *P. falciparum* PIG-B orthologs, responsible for adding the third mannose residue, could neither be found in the *B. bovis* nor in the *B. microti* genome. This finding suggests that either all GPI molecules of these *Babesia* parasites include a chain of two mannose residues instead of the commonly found chain of three mannoses, or that another yet unknown enzyme adds a third mannose residue. It is concluded that all the genes encoding for the factors necessary for GPI synthesis are predicted to be present in the genome of *B. microti*.

## 5. Identification and analysis of the GPI-anchored proteome of *B. microti*

Proproteins, to which GPI is attached post-translationally, share the following features: (i) an N-terminal signal peptide sequence targeting them to the endoplasmic reticulum (ER); (ii) a C-terminal transmembrane domain for transient anchoring to the ER membrane, and (iii) the GPI-attachment or omega site, where cleavage of the proprotein takes place and which is located a few amino acids before the C-terminal hydrophobic domain. Upon cleavage of the transmembrane domain, the protein is transferred onto a GPI anchor (Ferguson et al., 2009). Prediction of these three features with bioinformatic algorithms allows the in silico identification of GPI-anchored proteomes (Fig. 2), thus providing an attractive pool of antigens for vaccine and diagnostic test development. Seventeen proteins predicted to be GPI-anchored were identified in the *B. microti* proteome (Table 2). Most of these proteins coincide with the predictions of Cornillot et al. (2016),

who obtained a list of 19 predicted GPI-APs. Two of the proteins found in the present study (GenBank Accession numbers **XP_012647776.1** and **XP_012650569.1**) were not identified earlier, which brings the total of predicted GPI-APs to 21.

Interestingly, the genes encoding two of the identified GPI-APs (BmGPI12 and BmGPI13) are among the most expressed in both mice and hamsters (Silva et al., 2016). Similarly, in *B. bovis*, the gene encoding GPI-anchored Merozoite Surface Antigen-1 is one of the most actively transcribed in the merozoite stage (Pedroni et al., 2013), highlighting the importance of GPI-APs for membrane structure and/or function.

*Babesia microti* experimentally infected mice reacted with recombinant forms of several of the GPI-APs shown in Table 2 in a microarray antibody assay. Among these proteins, BmGPI12 mounted particularly strong IgM and IgG antibody responses. Moreover, in a pilot study, sera from *B. microti*-infected human patients showed ~35-fold higher and ~16-fold higher IgG and IgM reactivity, respectively, against recombinant BmGPI12 than the control non-infected group. These results indicate that BmGPI12 can be considered a biomarker for *B. microti*-infections (Cornillot et al., 2016). Recently, a fully-automated prototype antibody assay was developed based on recombinant BmGPI12 which, when applied to human samples, showed a high level of positive concordance with results of *B. microti* infection diagnosis by PCR or immunofluorescence. The estimated risk of human babesiosis among blood donors of tick-endemic areas is relatively elevated and higher than HIV. Thus, this type of sensitive diagnostic assay can help mitigate the spread of *B. microti* in affected countries (Cheng et al., 2018).

## 6. Structural analysis of GPI-APs in apicomplexans: domain repertoire

One of the first classifications of GPI-APs in apicomplexans relies on the size of these proteins. Medium-sized proteins (< 40 kDa) are generally constituted by a single domain (or a duplicated small domain). In contrast, in large proteins as found in *Plasmodium*, a multi-domain organisation is mainly found. As reviewed in Anantharaman et al. (2007), for host cell invasion apicomplexan parasites use either specific protein domains that are found only in apicomplexans, or conserved domains that are also found in other organisms, in particular in the genome of their host. Some of these domains of mammalian origin have been acquired through lateral gene transfer. Transmembrane parasite proteins that are involved in host cell invasion contain a large number of domains that are also found in mammals (e.g. Epidermal Growth Factor-like domain (EGF), Thrombospondin type-1 Repeat domain (TSR) coagulation factors). In contrast, only a few domains that are specific to apicomplexans, such as Duffy Binding Like domain (DBL) and Microneme Adhesive Repeat domain (MAR; Blumenschein et al., 2007), have been reported.

It is likely that the domain repertoires used at each parasite stage are shaped by different evolutionary pressures; for instance, malaria sporozoites that invade liver cells, which are structurally organized in an organ, are likely to have evolved adaptations that are different from those of merozoites that invade free-moving erythrocytes. It is tempting to speculate that mammalian domains are mainly involved in invasion of nucleated cells while parasite-specific domains are involved in invasion of erythrocytes. In addition, the large number of specific domains in parasite GPI-AP repertoires could reflect some adaptation to the relatively long exposure of these parasite surface proteins to the immune system during infection, in contrast to the “just-in-time” release of proteins from secretory organelles.

The three-dimensional (3D) structures of two GPI-anchored merozoite surface molecules of *Babesia* parasites (Bd37.1 in *B. divergens* and Bc28.1 in *B. canis*) have been resolved (Delbecq et al., 2008; Yang et al., 2012). Although both are involved in the binding of merozoites to erythrocytes, these two proteins bear no structural relationship with each other nor with other known GPI-AP structures in parasites. The immunological epitopes at the surface of Bd37.1 are highly clustered at one side of the proteins and at the unstructured parts, leaving one side of the proteins without detectable antibody-binding regions (Delbecq et al., 2008). A 3D structural analysis of Bd37.1 suggests that the protein can adopt different conformations which could be involved in immune escape (Delbecq et al., 2008). In contrast, the Bc28.1 protein appears to be stably structured around a single core, which is not likely to allow drastic conformational changes (Yang et al., 2012). Nevertheless, an unusually long α-helix in the C-terminal position suggests a large degree of freedom in protein dynamics at the merozoite surface. Both Bd37.1 and Bc28.1 contain additional unstructured parts and positively charged patches, but the significance of these features is not known.

## 7. Soluble form of proteins: functions and the notion of membrane context

One of the intriguing features of apicomplexan GPI-APs is the fact that they can be released from the parasite cell surface. As a result, these proteins can be found in the plasma of infected animals and in the supernatants of in vitro cultures of the parasite. This shedding could result from cleavage by a phospholipase, but for most known GPI-APs the exact mechanisms have not been determined. Since GPI-APs can be recognized by effector

molecules of the host immune system, shedding allows parasites to escape immune destruction. The fate and role of shed GPI-APs themselves in the host-parasite relationship is not known. It has been suggested that the glycan part of the GPI anchor interacts with host defence mechanisms, which could play a role in pathogenesis (Debierre-Grockiego and Schwartz, 2010). Indeed, in *B. canis*-infected dogs, fever was positively correlated with the level of SPA in plasma (Schetters et al., 2009). The fact that vaccination with supernatants of in vitro cultures of *B. canis* could protect dogs from clinical disease without an effect on the parasitaemia but on the level of SPA in plasma supports this view (Schetters et al., 1996).

Results from *Babesia* Bd37.1 and *Theileria* PIM proteins suggest that the cleaved, soluble forms of the GPI proteins have different binding characteristics compared with their membrane-bound counterparts (Casanova et al., 2006). It is suggested here that the location of the GPI protein in the context of the parasite plasma membrane (referred to as ‘membrane context’) affects the conformation, orientation and association with other molecules, as has been described for PrP, a GPI-AP prion protein found in mammals (Mahal et al., 2012). Coexistence of multiple conformations of a protein has been associated with enzyme allostery and was suggested to occur in antibodies (reviewed in James and Tawfik, 2003). Such structural dynamics could be crucial for parasite survival. First, if the soluble form of the protein were structurally similar to the membrane-bound form that is used to enter the host cell, it would compete for the host cell receptor (Fig. 3). Hence, switching to the alternative conformation would prevent the soluble protein from binding to the host cell receptor, thus allowing the parasites to bind to and enter the host cell. A second advantage of structural dynamics could be related to evasion of the immune

response. For instance, if the cleaved protein had a conformation similar to the protein in the membrane context, then antibodies against the soluble protein would also recognize the protein at the parasite surface. This could then lead to, e.g., blocking of binding to the host cell receptor, or destruction of the parasite by immune phagocytosis and/or lysis through complement activation. Hence, it would be advantageous if the soluble protein would change its structural conformation and prevent the generation of antibodies that reacted with the membrane-bound form of the protein. This is supported by results from the *B. canis*-dog model; dogs that were vaccinated with SPA from in vitro cultures were protected against disease after a virulent *B. canis* infection without affecting the parasite proliferation (Schetters et al., 1996). Protection was associated with the presence of antibodies against a 39 kDa antigen, which appeared to be the soluble hydrophilic form of a 40 kDa merozoite surface membrane protein (Moubri et al., 2018). Apparently, antibodies against the soluble protein did not negatively affect parasite proliferation. In contrast, vaccination with the recombinant hydrophobic 40 kDa protein induced antibodies that reacted with the 40 kDa merozoite surface protein. When the dogs were challenged, protection was reflected in a strong anti-parasite response (Moubri et al., 2018).

This model is further corroborated by the analysis of the recombinant Bd37.1-based vaccine against *B. divergens*. Using this vaccine, an efficient immune response was obtained only with hydrophobic recombinant antigens, but not with the hydrophilic versions of the recombinant Bd37.1, although similar levels of antibody were induced (Delbecq et al., 2006). Protection was reflected in a strong anti-parasite response. These results suggest that the hydrophobic protein exhibits parasite epitopes that are also expressed in GPI-AP in the membrane context. As a result the immune response is directed

against the merozoite. Similar epitopes appear to not be present on the hydrophilic version of the Bd37.1 protein. Importantly, vaccination with the hydrophobic recombinant Bd37.1 protein induced protection against heterologous infection, which indicates that the hydrophobic protein expresses epitopes are present in a wide range of genetically different *B. divergens* strains. In contrast, vaccination with the native soluble (hydrophilic) form of Bd37 from supernatants of in vitro cultures induced immunity that was highly strain-dependent (Précigout et al., 2004).

## 8. Outlook

Control of babesiosis in animals comprises a number of measures, which depend on the host species. In production animals, tick control by acaricide treatment and vaccination of animals with live attenuated *Babesia* vaccines is practised in countries with high parasite prevalence. With increasing acaricide resistance, tick control by vaccination appears to become an important additional tool (Schetters, 2018). It has the added advantage that there is no withdrawal period for meat or milk. With the advent of effective recombinant *Babesia* vaccines, live-attenuated vaccines will eventually be replaced. In canine babesiosis, vaccination with subunit vaccines has been practised (Schetters and Montenegro-James, 1995). With the discovery of a recombinant *Babesia* antigen that induces protection against experimental infection in dogs, it is expected that vaccines with recombinant antigens will become commercially available (Moubri et al., 2018).

The GPI-anchored *Babesia* proteins that are located at the merozoite surface appear attractive vaccine candidate antigens, despite the fact that many of them are polymorphic in nature. The results obtained with recombinant forms of GPI-APs suggest that the 3D

structure of the protein influences the expression and/or immunodominance of epitopes that are common on geographically different *Babesia* strains. Results further indicated that increased relative hydrophobicity is crucial for the induction of protective immunity that transcends strain variation. Although this seems to apply to *B. divergens* and *B. canis*, it remains to be determined whether this also applies to other *Babesia* spp. including *B. microti*.

Although the incidence of *Babesia* infection in humans is increasing, it is not likely that a vaccine against human *Babesia* parasites, or against the ticks that transmit the parasites, will be developed and introduced at a large scale in the human population. It could be envisaged, however, that a vaccine is used to protect humans who are particularly vulnerable to infection such as elderly or immunocompromised subjects. In addition, healthy subjects who have a high chance of becoming infected, such as foresters who work in highly endemic areas, could benefit from vaccination. Until that time, hygienic measures e.g. wearing protective clothing that may be impregnated with an acaricide, visual inspection and removal of ticks after visiting a potentially tick-infested area, and chemotherapeutic treatment of *Babesia* infection remain the methods of control.

**Acknowledgements**

This work was funded by Merck Sharp and Dohme-Animal Health (MSD-AH), the Netherlands and Instituto Nacional de Tecnología Agropecuaria (INTA; PNBIO 1131034), Argentina.

## References


Anantharaman, V., Iyer, L.M., Balaji, S., Aravind, L., 2007. Adhesion Molecules and Other Secreted Host-Interaction Determinants in Apicomplexa: Insights from Comparative Genomics. Int Rev Cytol 262, 1-74.

Blumenschein, T.M.A., Friedrich, N., Childs, R.A., Saouros, S., Carpenter, E.P., Campanero-Rhodes, M.A., Simpson, P., Chai, W., Koutroukides, T., Blackman, M.J., Feizi, T., Soldati-Favre, D., Matthews, S., 2007. Atomic resolution insight into host cell recognition by *Toxoplasma gondii*. EMBO J 26, 2808-2820.

Carcy, B., Précigout, E., Valentin, A., Gorenflot, A., Schrevel, J., 1995. A 37-kilodalton glycoprotein of *Babesia divergens* is a major component of a protective fraction containing low-molecular-mass culture-derived exoantigens. Infect Immun 63, 811-817.

Carcy, B., Précigout, E., Schetters, T., Gorenflot, A., 2006. Genetic basis for GPI-anchor merozoite surface antigen polymorphism of *Babesia* and resulting antigenic diversity. Vet Parasitol 138, 33-49.

Casanova, C.L., Xue, G., Taracha, E.L., Dobbelaere, D.A., 2006. Post-translational signal peptide cleavage controls differential epitope recognition in the QP-rich domain of recombinant *Theileria parva* PIM. Mol Biochem Parasitol 149, 144-154.

Cheng, K., Coller, K.E., Marohnic, C.C., Pfeiffer, Z.A., Fino, J.R., Elsing, R.R., Bergsma, J., Marcinkus, M.A., Kar, A.K., Gumbs, O.H., Otis, K.S., Fishpaugh, J., Schultz, P.W., Pope, M.R., Narvaez, A.R., Wong, S.J., Madison-Antenucci, S., Leary, T.P.,

Dawson, G.J., 2018. Performance evaluation of a prototype Architect antibody assay for *Babesia microti*. J Clin Microbiol 56, 1-11 doi: 10.1128/JCM.00460-18.

Cornillot, E., Hadj-Kaddour, K., Dassouli, A., Noel, B., Ranwez, V., Vacherie, B., Augagneur, Y., Brès, V., Duclos, A., Randazzo, S., 2012. Sequencing of the smallest Apicomplexan genome from the human pathogen *Babesia microti*. Nucleic Acids Res 40, 9102-9114.

Cornillot, E., Dassouli, A., Pachikara, N., Lawres, L., Renard, I., Francois, C., Randazzo, S., Brès, V., Garg, A., Brancato, J., Pazzi, J.E., Pablo, J., Hung, C., Teng, A., Shandling, A.D., Huynh, V.T., Krause, P.J., Lepore, T., Delbecq, S., Hermanson, G., Liang, X., Williams, S., Molina, D.M., Ben Mamoun, C., 2016. A targeted immunomic approach identifies diagnostic antigens in the human pathogen *Babesia microti*. Transfusion 56, 2085-2099.

Debierre-Grockiego, F., Schwarz, R.T., 2010. Immunological reactions in response to apicomplexan glycosylphosphatidylinositols. Glycobiology 20, 801-811.

Delbecq, S., Précigout, E., Vallet, A., Schetters, Th., Gorenflot, A., 2002. *Babesia divergens*: Cloning and biochemical characterisation of Bd37. Parasitology 125, 305-212.

Delbecq, S., Hadj-Kaddour, K., Randazzo, S., Kleuskens, J., Schetters, T.P.M., Gorenflot, A., Précigout, E., 2006. Hydrophobic moieties in recombinant proteins are crucial to generate efficient saponin-based vaccine against Apicomplexan *Babesia divergens*. Vaccine 24, 613-621.

Delbecq, S., Auguin, D., Yang, Y-S., Lőhr, F., Arold, S., Schetters, Th., Précigout, E., Gorenflot, A.,. Roumestand, C., 2008. The solution structure of the adhesion protein Bd37 from *Babesia divergens* reveals structural homology with eukaryotic proteins involved in membrane trafficking. J Mol Biol 375, 409-424.

Delorenzi, M., Sexton, A., Shams-Eldin, H., Schwarz, R.T., Speed, T., Schofield, L., 2002. Genes for glycosylphosphatidylinositol toxin biosynthesis in *Plasmodium falciparum*. Infect Immun 70, 4510-4522.

Dominguez, M., Echaide, I., Echaide, S.T., Mosqueda, J., Cetrá, B., Suarez, C.E., Florin-Christensen, M., 2010. In silico predicted conserved B-cell epitopes in the merozoite surface antigen-2 family of *B. bovis* are neutralization sensitive. Vet Parasitol 167, 216-26.

Ferguson, M.A., 1999. The structure, biosynthesis and functions of glycosylphosphatidylinositol anchors, and the contributions of trypanosome research. J Cell Sci 112, 2799-2809.

Ferguson, M., Kinoshita, T., Hart, G., 2009. Essentials of glycobiology. Cold Spring Harbor Lab Press, Cold Spring Harbor, NY, USA.

Florin-Christensen, M., Suarez, C.E., Rodriguez, A.E., Flores, D.A., Schnittger, L., 2014. Vaccines against bovine babesiosis: where we are now and possible roads ahead. Parasitology 141, 563–1592.

Hadj-Kaddour, K., Carcy, B., Vallet, A., Randazzo, S., Delbecq, S., Kleuskens, J., Schetters, T., Gorenflot, A., Précigout, E., 2007. Recombinant protein Bd37

protected gerbils against heterologous challenges with isolates of *Babesia divergens* polymorphic for the bd37 gene. Parasitology 134, 187-196.

Igarashi, I., Aikawa, M., Kreier, J.P., 1988. Host cell-parasite interactions in babesiosis. In: Ristic, M. (ed.) Babesiosis of Domestic Animals and Man. CRC Press, Boca Raton (FL), USA, pp 53-69.

James, L.C., Tawfik, D.S., 2003. Conformational diversity and protein evolution – a 60-year-old hypothesis revisited. Trends Biochem Sci 28, 361-368.

Mahal, S.P., Jablonski, J., Suponitsky-Kroyter, I., Oelschlegel, A.M., Herva, M.E., Oldstone, M., Weissmann, C., 2012. Propagation of RML Prions in Mice Expressing PrP Devoid of GPI Anchor Leads to Formation of a Novel, Stable Prion Strain. PLOS Path 8, DOI:10.1371/journal.ppat.1002746

McElwain, T.F., Perryman, L.E., Musoke, A.J., McGuire, T.C., 1991. Molecular characterization and immunogenicity of neutralization-sensitive *Babesia bigemina* merozoite surface proteins. Mol Biochem Parasitol 47, 213-22.

Moubri, K., Kleuskens, J., Van de Crommert, J., Scholtes, N., Van Kasteren, T., Delbecq, S., Carcy, B., Précigout, E., Gorenflot, A., Schetters, T., 2018. Discovery of a recombinant *Babesia canis* supernatant antigen that protects dogs against virulent challenge infection. Vet Parasitol 249, 21-29.

Pedroni, M.J., Sondgeroth, K.S., Gallego-Lopez, G.M., Echaide, I., Lau, A.O., 2013. Comparative transcriptome analysis of geographically distinct virulent and

attenuated *Babesia bovis* strains reveals similar gene expression changes through attenuation. BMC Genomics 14, 763.

Précigout, E., Gorenflot, A., Valentin, A., Bissuel, G., Carcy, B., Brasseur, P., Moreau, Y., Schrevel, J., 1991. Analysis of immune responses of different hosts to *Babesia divergens* isolates from different geographic areas and capacity of culture-derived exoantigens to induce efficient cross-protection. Infect Immun 59, 2799-2805.

Precigout, E., Delbecq, S., Vallet, A., Carcy, B., Camillieri, S., Hadj-Kaddour, K., Kleuskens, K., Schetters, T., Gorenflot, A., 2004. Association between sequence polymorphism in an epitope of *Babesia divergens* Bd37 exoantigen and protection induced by passive transfer. Int J Parasitol 34, 585-593.

Ristic, M., Kakoma, I., 1988. Exoantigens of Babesia. In: Ristic, M. (ed.) Babesiosis of Domestic Animals and Man. CRC Press, Boca Raton (FL), USA, pp 131-141.

Rodríguez, A.E., Couto, A., Echaide, I., Schnittger, L., Florin-Christensen, M., 2010. *Babesia bovis* contains an abundant parasite-specific protein-free glycerophosphatidylinositol and the genes predicted for its assembly. Vet Parasitol 167, 227-235.

Schetters, Th.P.M., 2018. Vaccination against ticks. In: Meng, C.Q., Sluder, A.E. (eds.) Ectoparasites: Drug Discovery against Moving Targets. Wiley-VCH Verlag GmbH, Weinheim, Germany, pp 25-42.

Schetters, Th., Montenegro-James, S., 1995. Vaccines against babesiosis using soluble parasite antigens. Parasitol Today 11, 456-462.

Schetters, Th. P.M., Scholtes, N.C., Kleuskens, J.A.G.M., Bos, H.J., 1996. Not peripheral parasitaemia but the level of soluble parasite antigen in plasma correlates with vaccine efficacy against *Babesia canis*. Parasite Immunol18, 1-6.

Schetters, Th.P.M., Kleuskens, J., Van De Crommert, J., De Leeuw, P., Finizio, A.-L., Gorenflot, A., 2009. Systemic inflammatory responses in dogs experimentally infected with *Babesia canis*: a haematological study. Vet Parasitol 162, 7-15

Silva, J.C., Cornillot, E., McCracken, C., Usmani-Brown, S., Dwivedi, A., Ifeonu, O.O., Crabtree, J., Gotia, H.T., Virji, A.Z., Reynes, C., 2016. Genome-wide diversity and gene expression profiling of *Babesia microti* isolates identify polymorphic genes that mediate host-pathogen interactions. Sci Rep 6, 35284.

Smith, T.K., Sharma, D.K., Crossman, A., Dix, A., Brimacombe, J.S., Ferguson, M.A., 1997. Parasite and mammalian GPI biosynthetic pathways can be distinguished using synthetic substrate analogues. EMBO J 16, 6667-6675.

Suarez, C.E., Florin-Christensen, M., Hines, S.A., Palmer, G.H., Brown, W.C., McElwain, T.F., 2000. Characterization of allelic variation in the *Babesia bovis* merozoite surface antigen 1 (MSA-1) locus and identification of a cross-reactive inhibition-sensitive MSA-1 epitope. Infect Immun 68, 6865-70.

Timms, P., Dalgliesh, R.J., Barry, D.N., Dimmock, C.K., Rodwell, B.J., 1983. *Babesia bovis*: comparison of culture-derived parasites, non-living antigen and conventional vaccine in the protection of cattle against heterologous challenge. Aust Vet J 60, 75-77.

Vannier, E.G., Diuk-Wasser, M.A., Ben Mamoun, C., Krause, P.J.,2015. Babesiosis. Infect Dis Clin North America 29, 357-70.

Wilkowsky, S.E., Farber, M., Echaide, I., Torioni de Echaide, S., Zamorano, P.I., Dominguez, M., Suarez, C.E., Florin-Christensen, M., 2003. *Babesia bovis* merozoite surface protein-2c (MSA-2c) contains highly immunogenic, conserved B-cell epitopes that elicit neutralization-sensitive antibodies in cattle. Mol Biochem Parasitol 127,133-41.

Yang, Y.-S., Murciano, B., Moubri, K., Cibrelus, P., Schetters, T., Gorenflot, A., Delbecq, S., Roumestand, C., 2012. Structural and functional characterization of Bc28.1, major erythrocyte-binding protein from *Babesia canis* merozoite surface. J Biochem 287, 9495-9508.

## Figure legends

Fig. 1. Biosynthetic pathway of *Babesia microti* glycosylphosphatidylinositol (GPI). The biosynthesis starts at the cytoplasmic side of the endoplasmic reticulum (ER) and continues in the ER lumen. The first Uridine diphosphate-N-acetylglucosamine (UDP-GlcNac) is linked to a phosphatidylinositol (PI) molecule by a complex formed by the enzymes PIG (PI glycan anchor biosynthesis)-A and GPI-1 (step 1). Then, the N-acetyl group is removed by PIG-L (step 2) and the GlcPI is translocated to the ER lumen by an uncharacterized flippase (step 3). A fatty acid is added to the PI inositol ring by PIG-W, forming GlcN-acyl-PI (step 4). Two mannose (Man) molecules are sequentially added to GlcN-acyl-PI catalyzed by PIG-M and PIG-V (steps 6 and 7). The mannose donor substrate is dolichol-phosphate-mannose, synthesized from dolichol-phosphate (Dol-P) and GDP-mannose by DPM1 (Dolichol-phosphate mannosyltransferase 1) at the cytoplasmic side of the ER (step 5), and transported across the ER membrane. When the GPI is destined to function as an anchor, ethanolamine-phosphate is added by PIG-O, and finally, a protein is translocated to the GPI molecule by the GPI anchor attachment 1 protein (GAA1) and GPI-8 complex (not shown).

Fig. 2. Strategy for the identification of glycosylphosphatidylinositol (GPI)-anchored proteins in *Babesia microti*. The proteome of *B. microti* was scanned with SignalP to identify the secretome, i.e. signal peptide-containing proteins. Then, the presence of a

transmembrane helix in the C-terminus was detected by five programs: TO¨PCONs, DASTMfilter, TMHMM, HMMTOP and Constrained Consensus TOPology server. The resulting protein list was scanned with four GPI predictor programs: GPI-SOM, big-PI (Protozoa), big-PI (Plants) and PredGPI. Proteins detected by at least two of these programs are shortlisted in Table 2.

Fig. 3. Immunobiological interactions of glycosylphosphatidylinositol (GPI)-anchored proteins (GPI-AP) from *Babesia* merozoites. GPI-AP are relatively abundant due to differential expression and differential shedding of the anchor. The potential heterogeneity in the osidic anchor could affect shedding, packing and orientation (1). GPI-AP interact with the host cell surface for penetration. The membrane vicinity induces electrostatic perturbation and stimulates conformational changes, which affect packing and orientation of GPI-AP that could increase avidity for the host cell (2). Soluble GPI-AP could potentially stick to the host cell surface, with low affinity (3) and bind to antibodies (4). Membrane-bound GPI-AP could be recognized by specific antibodies (5). It is thought that immune protection/escape relies on the equilibrium between these two interactions (4 and 5). A continuous release of GPI-AP during the active penetration of the cell (shedding) or by enzymatic cleavage of the anchor (by lipase or protease) from plasma membrane could overwhelm the antibody production (6).

**Table 1.** Identification of *Babesia microti* proteins predicted to participate in the synthesis of glycosylphosphatidylinositol (GPI) anchors and the attachment of GPI anchors to nascent proteins.

| Enzymatic activity | Protein name | GenBank Accession number | GenBank annotation |
|---|---|---|---|
| Glycosyltransferase | PIG-A | XP_021337772.1 | Phosphatidylinositol glycan, class A |
| | GPI-1 or PIGQ | XP_021338686.1 | Phosphatidylinositol glycan, class Q |
| de-N-acetylase | PIG-L | XP_021337725.1 | N-acetylglucosaminyl phosphatidyl inositol deacetylase |
| Flippase | Nd | Nd | Nd |
| Acyltransferase | PIG-W | XP_021338156.1 | Multiple TM. Not a GPI protein |
| Dol-P-Man synthase | DPM-1 | XP_021337246.1 | Dolichol-phosphate mannosyltransferase; DPM1 |
| Mannosyltransferase MT-I | PIG-M | XP_021338330.1 | phosphatidylinositol glycan, class M |

| | | | |
|---|---|---|---|
| Mannosyltransferase MT-II | PIG-V | XP_012650107.1 | Conserved protein, unknown function |
| Etanolamine-P transferase | PIG-O | XP_021338017.1 | phosphatidylinositol glycan, class O |
| Transamidase | GAA1 | XP_021337605 | glycosylphosphatidylinositol anchor attachment 1 protein |
| | GPI-8 | XP_012650207.2 | GPI-anchor transamidase |

Nd, not determined

**Table 2.** Identification and description of glycosylphosphatidylinositol (GPI)-anchored proteins of *Babesia microti*.

| No | GenBank ID | GenBank Annotation | SignalP | GPIsom | PredGPI | BigPI | C-term | Length (aa) | Exons | Domains | *B. microti*-specific |
|---|---|---|---|---|---|---|---|---|---|---|---|
| 1 | XP_021337223 | BmGPI15, Sexual stage antigen, Pfam s48/45 | + | + | HP | + | + | 1024 | 1 | None | Yes |
| 2 | XP_012647442[a] | BmGPI5, Sexual stage antigen, Pfam s48/45 | + | + | HP | + | + | 881 | 1 | 6-Cys PS51701 | No |
| 3 | XP_012648325[a] | BmGPI8, Sexual stage antigen, Pfam s48/45 | + | + | HP | + | + | 924 | 1 | 6-Cys PS51701 | No |
| 4 | XP_012647158 | BmGPI1, *B. microti*-specific | + | + | HP | + | + | 798 | 1 | None | Yes |
| 5 | XP_012647167[b] | BmGPI4, *B. microti*-specific, 24 tandem | + | + | HP | + | + | 648 | 1 | GmlU TIGR01173 | No |

| | | | | | | | | | | | |
|---|---|---|---|---|---|---|---|---|---|---|---|
| | | repeat, IPR011004 | | | | | | | | | |
| 6 | XP_012648768 | BmGPI13, *B. microti*-specific | + | + | HP | + | + | 319 | 1 | IG_MHC PS00290 | Yes |
| 7 | XP_012649764 | BmGPI18, acid phosphatase | + | + | WP | + | + | 380 | 4 | GAP PTZ00422 | No |
| 8 | XP_021338453[c] | BmGPI11, Conserved protein, unknown function | weak | + | HP | 0 | + | 298 | 8 | MOLO-1 Pfam 17175 | No |
| 9 | XP_021338712 | BmGPI17, Conserved protein, unknown function | + | + | HP | 0 | + | 456 | 2 | None | No |
| 10 | XP_012648767[d] | BmGPI12, BMN1 family, BMN1-9, BmSA1 orthologue | + | + | HP | 0 | + | 328 | 1 | None | Yes |
| 11 | XP_012649179 | BmGPI16, Chemotaxis domain | + | + | HP | 0 | + | 437 | 1 | None | Yes |
| 12 | XP_012648610[d] | BmGPI10, BMN1 | + | + | HP | 0 | + | 304 | 1 | None | Yes |

| | | | | | | | | | | | |
|---|---|---|---|---|---|---|---|---|---|---|---|
| | | family, N1-21a orthologue | | | | | | | | | |
| 13 | XP_012647166[b] | BmGPI3, *B. microti*-specific | + | + | HP | 0 | + | 530 | 1 | None | Yes |
| 14 | XP_021338061[c] | BmGPI6, Conserved protein, unknown function | + | + | P | 0 | + | 252 | 8 | MOLO-1 Pfam17175 | No |
| 15 | **XP_012647776**[d] | BMN1 family | + | + | P | 0 | + | 194 | 2 | None | Yes |
| 16 | **XP_012650569**[d] | BMN1 family | + | + | P | 0 | + | 280 | 2 | None | Yes |
| 17 | XP_012648607[d] | BmGPI9, BMN1 family | + | + | WP | 0 | + | 281 | 1 | None | Yes |

Proteins positively predicted with at least two GPI-anchor prediction programs, with a signal peptide and a C-terminal transmembrane domain, and a mature protein predicted as hydrophilic are included in decreasing order, according to the strength of their GPI-anchor prediction. A plus sign (+) and 0 show positive and no prediction, respectively, using the default parameters of each program. HP, P and WP

correspond to prediction with high, medium or low probability, respectively. In the case of XP_021338453, prediction of a signal peptide is considered weak, since a signal peptide was not predicted with the default parameters of the program, but could be detected with a lower cut-off value. Proteins with the same superindex are paralogs. Proteins not predicted as GPI-anchored in the analysis of Cornillot et al. (2016) are in bold. Domains: 6-Cys: 6-cysteine domain; IG-MHC: Immunoglobulins and major histocompatibility complex proteins signature; GAP: glideosome-associated protein 50; MOLO-1: Modulator of levamisole receptor-1; GmlU: UDP-N-acetylglucosamine diphosphorylase/glucosamine-1-phosphate N-acetyltransferase.

aa, amino acid

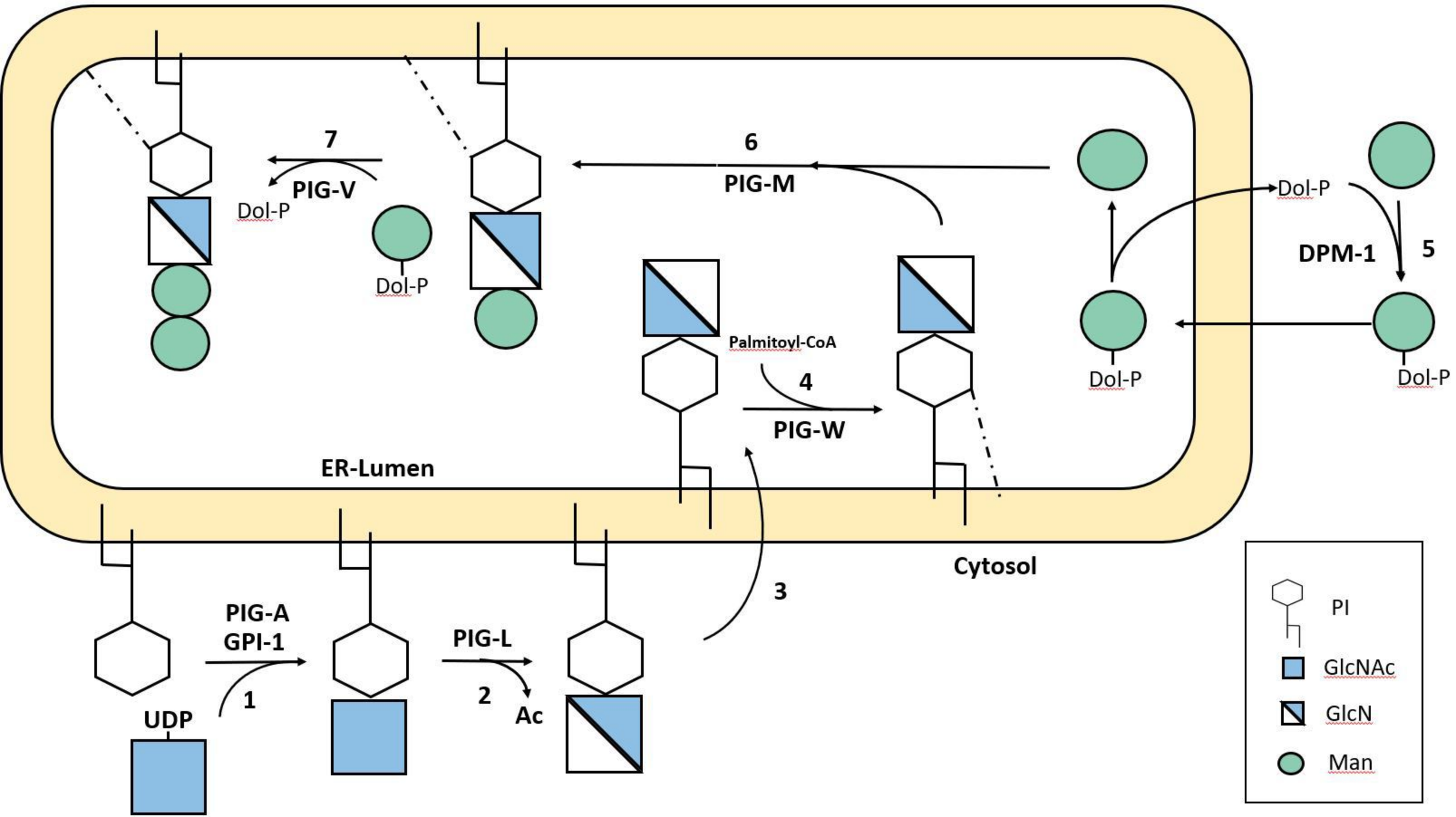
7
PIG-V
Dol-P
Dol-P
6
PIG-M
Dol-P
DPM-1
5
Dol-P
Dol-P
Palmitoyl-CoA
4
PIG-W
ER-Lumen
Cytosol
3
PIG-A
GPI-1
1
UDP
PIG-L
2
Ac
PI
GlcNAc
GlcN
Man

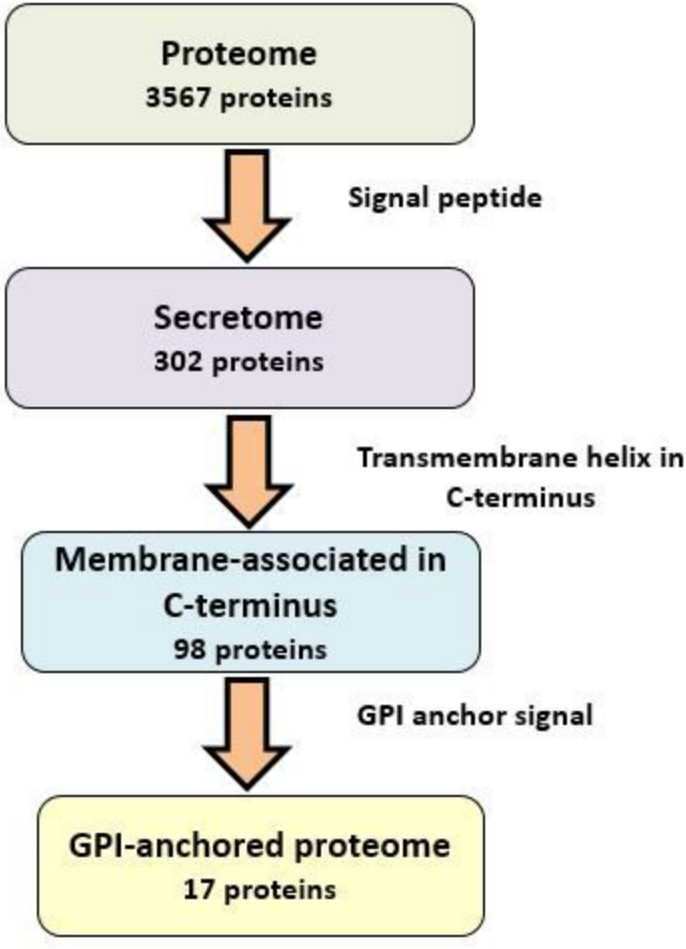
Proteome
3567 proteins
Signal peptide
Secretome
302 proteins
Transmembrane helix in C-terminus
Membrane-associated in C-terminus
98 proteins
GPI anchor signal
GPI-anchored proteome
17 proteins

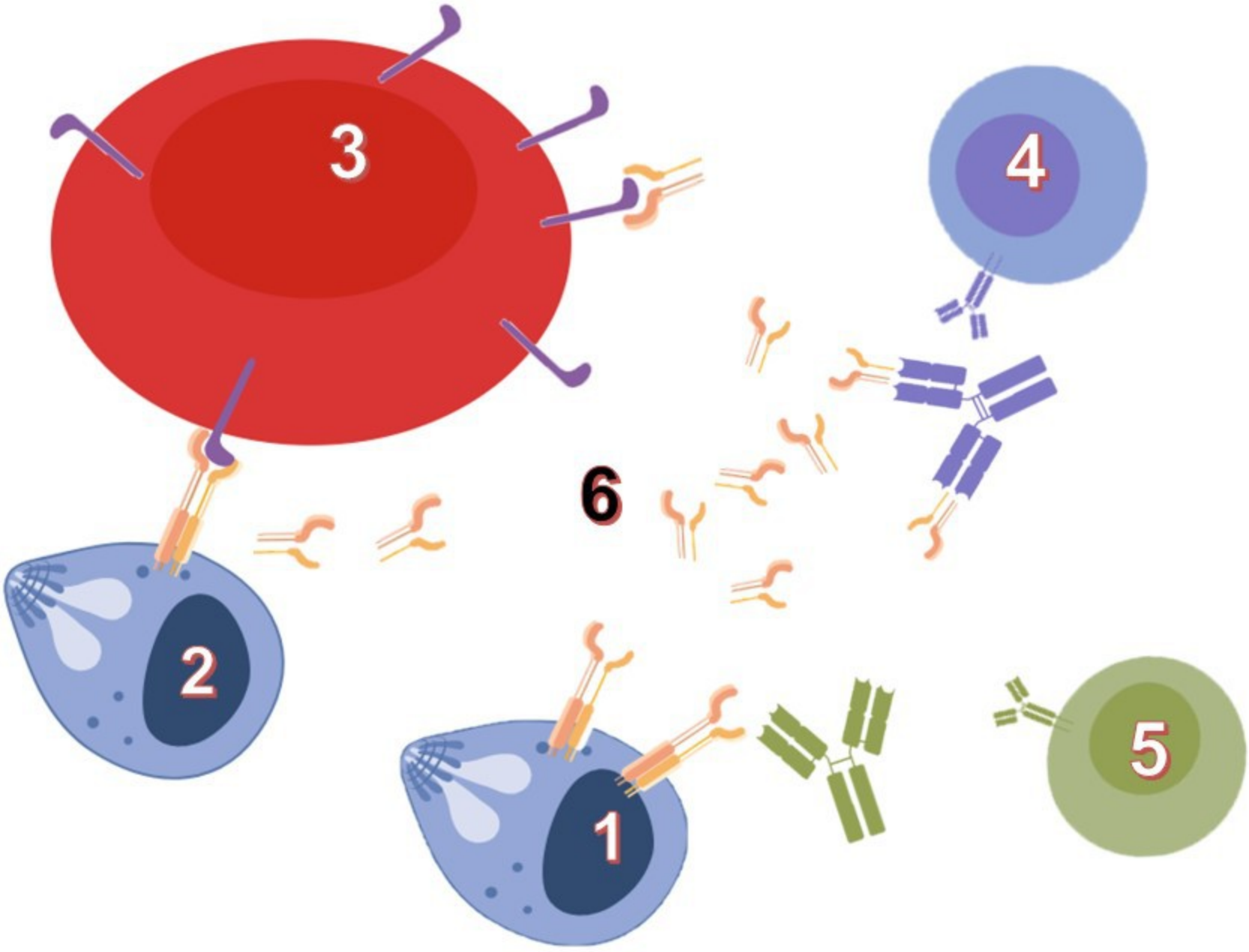
3
4
6
2
1
5