# Identification of autophagy genes in Ciona intestinalis: A new experimental model to study autophagy mechanism

Nelly Godefroy, Céline Hoa, Foevos Tsokanos, Emilie Le Goff, Emmanuel J.P. Douzery, Stephen Baghdiguian, Camille Martinand-Mari

▶ **To cite this version:**

Nelly Godefroy, Céline Hoa, Foevos Tsokanos, Emilie Le Goff, Emmanuel J.P. Douzery, et al.. Identification of autophagy genes in Ciona intestinalis: A new experimental model to study autophagy mechanism. Autophagy, 2014, 5 (6), pp.805 - 815. 10.4161/auto.8995 . hal-01878507

**HAL Id: hal-01878507**

**https://hal.umontpellier.fr/hal-01878507**

Submitted on 26 Sep 2018

**HAL** is a multi-disciplinary open access archive for the deposit and dissemination of scientific research documents, whether they are published or not. The documents may come from teaching and research institutions in France or abroad, or from public or private research centers.

L'archive ouverte pluridisciplinaire **HAL**, est destinée au dépôt et à la diffusion de documents scientifiques de niveau recherche, publiés ou non, émanant des établissements d'enseignement et de recherche français ou étrangers, des laboratoires publics ou privés.

# Identification of autophagy genes in *Ciona intestinalis*: a new experimental model to study autophagy mechanism

Nelly Godefroy, Céline Hoa, Foevos Tsokanos, Emilie Le Goff, Emmanuel J.P. Douzery, Stephen Baghdiguian, Camille Martinand-Mari *

Institut des Sciences de l'Evolution (UMII, CNRS UMR 5554), Université Montpellier 2, CC063, 34095 Montpellier, France

*Corresponding author ; e-mail address : camille.mari@univ-montp2.fr

**Running title:** Study of autophagy genes in *Ciona intestinalis*

**Acknowledgments:** We thank Khalid Belkhir (ISEM, CNRS-UMR5554) for scientific discussions. We are grateful to "La Ligue contre le cancer – region Languedoc-Roussillon" which supported this work. This work has been supported by N° 2009-YYY of the Institut des Sciences de l'Evolution de Montpellier (UMR 5554 - CNRS).

**Abbreviations:** PCD: Programmed Cell Death; ATG: AuTophaGy-related; TOR: Target Of Rapamycin; MAPLC3: Microtubule-Associated Protein Light Chain 3; Vps15: Vacuolar Protein Sorting factor 15; Vps34: Vacuolar Protein Sorting factor 15; PI3K: PhosphatidylInositol-3-phosphate Kinase; PI: PhosphatidylInositol; GABARAP(L): GABA Receptor Associated Protein (Like); DRAM: Damage-Regulated Autophagy Modulator.

# ABSTRACT

Programmed cell death (PCD) is a mechanism implicated in many physiological and pathological processes. Until recently, apoptosis (self killing) was the most largely studied mechanism of PCD but a growing number of laboratories is now interested in autophagy (self eating). Since a few years data showing a tight link between both pathways accumulate. Until now our laboratory used *Ciona intestinalis*, a chordate model in which *in vivo* experiments are possible, to study apoptosis. Recently, we showed that autophagy also occurs in the development of *Ciona intestinalis* and that the specific markers of both types of death are found in the same tissues and/or in the same cells. These results drove us to postulate that *Ciona intestinalis* can be a good model to study the link between apoptosis and autophagy. In this article, we conducted an *in silico* study of autophagy genes. We explored the genomes of *Ciona intestinalis*, of the second ascidian *Ciona savignyi*, and those of the classical biological models (*Saccharomyces cerevisiae*, *Drosophila melanogaster*, *Caenorhabditis elegans* and *Homo sapiens*) to extract and compare autophagy gene sequences. This genomic study was completed by an analysis of: (i) mRNA profile expression during development and (ii) the localisation of Beclin protein by immunofluorescent staining in the *Ciona intestinalis* larvae. Taken together, results allowed us to conclude that a complex autophagic machinery is present in *Ciona intestinalis*. Actually, the number of autophagy genes in *Ciona intestinalis* is comparable to the number of autophagy genes in human.



**Key words:** Programmed Cell Death, Autophagy, *Ciona intestinalis*, Autophagy genes, Phylogeny.

# INTRODUCTION

Programmed cell death (PCD) study represents an important field of research. PCD is implicated in physiological processes (*i.e.* tissue homeostasis, development, and dangerous cell elimination) and its deregulation is observed in many pathologies (*e.g.* cancer, neurodegenerative diseases, HIV infection). Two main pathways have been described. Apoptosis (Type I PCD) is a degradation of cells whose principal characteristics are: nucleus condensation, compaction of the cytoplasm, chromatin fragmentation and formation of apoptotic bodies (simple membrane vesicles) which are degraded by phagocytes or neighbouring cells.[1] Autophagy (Type II PCD) is a bulk degradation process whereby organelles and cytoplasm are engulfed in a double membrane network that is targeted to lysosomes.[2] The fusion between those two membrane networks leads to the formation of a new specific proteolytic compartment, the autophagosome. Even if autophagy was first studied for its role in cell survival (intracellular protein and organelle clearance), it is now well established that autophagy can lead to cell death and it has been implicated in different physiological processes like starvation adaptation, development, anti-aging, elimination of microorganisms and tumor suppression.[3] In mammals, autophagy has been also implicated in either the pathogenesis or response to a wide variety of diseases, including neurodegenerative diseases, chronic bacterial and viral infections, atherosclerosis, and cancer (for a review see ref.4). An important step in the study of autophagy was the discovery of ATG (AuTophaGy related) proteins in S*accharomyces cerevisiae* in the middle of 1990's (for a review see ref.5). This discovery allowed the molecular dissection of the process and the understanding of its physiological importance.

The autophagy proteins were divided into 4 functional groups: (i) a protein kinase autophagy regulatory complex that responds to upstream signals (including nutrient

limitation); (ii) a lipid kinase signalling complex that mediates vesicle nucleation; (iii) an ubiquitin-like protein conjugation pathway that is required for vesicle expansion and completion; and (iv) a retrieval pathway required for the disassembly of autophagy protein complexes from matured autophagosomes (Figure 2A).[5-7] The most studied negative regulator of ATG genes, TOR (Target Of Rapamycin), acts upstream of the autophagy pathways.

Until now, two approaches, one based on cell biology and biochemistry studies and the other based on classic or reverse genetics have been proven fruitful in studying cell deaths (type I and type II). Both approaches possess complementary advantages. The first one is achieved principally in cultured cells and not in a whole organism but allows the direct study of human cells. The second shows the advantage of an *in viv*o experimental study but is mainly pursued in organisms evolutionary far from human and mouse, like *Caenorhabditis elegans* and *Drosophila melanogaster*. Our laboratory chose to use the ascidian *Ciona intestinalis* (*Chordata, Tunicata, Ascidiacea*), an emergent model organism in cell and developmental biology, that appears an interesting compromise allowing the *in vivo* experimental study of cell death in a representative of tunicates, the phylum the most closely related to vertebrates.[8,9] Actually, among chordates, tunicates are more closely related to vertebrates than to the amphioxus (Cephalochordates).[10]

*C. intestinalis* is a solitary ascidian, hermaphrodite and cosmopolitan which propagates through sexual reproduction. Fertilization takes place in sea water from all over the world after gametes are released. The tadpole larva which develops from fertilized egg consists of approximately 2600 cells forming a small number of organs. The life cycle of *C. intestinalis* presents two phases: a mobile larval phase during which the organization plan presents a very strong homology with that of vertebrates and, after metamorphosis, a sessile adult phase, during which the organism is permanently fixed to a substratum where nutrition is ensured by filtration.[11] Interestingly, embryogenesis of *C. intestinalis* is rapid (18 hours at 18°C) and all stages can be reproduced experimentally in a controlled laboratory environment

after *in vitro* fertilization. *C. intestinalis* presents major interests: like for *C. elegans*, the lineage of embryonic cells is invariant and has been well described.[12] Its genome is fully sequenced and largely annotated (15852 protein-coding genes suggested)[13] and numerous mammalian tools like human or mouse antibodies can be used in *C. intestinalis*.[11,14,15] In addition, the morphogenesis of chordate structures (*e.g.* notochord and dorsal nerve cord) at tadpole stage was conserved, and it was recently shown that tunicates, to which ascidians belong, represent the closest living relatives to vertebrates.[9,10] Thus, the simplicity of the organism conjugated to complexity of its development and the particular phylogenetic place of ascidians in the evolutionary shift between non-vertebrates (*e.g.* nematode, fruit fly) and vertebrates give a special meaning to the study of cell death pathways in an ascidian.

Terajima et al. have yet identified the apoptotic machinery in *C. intestinalis*.[16] Moreover, it has been pointed out that the core components of the apoptotic machinery are present in the *C. intestinalis* genome and that this biochemical equipment appears as complex as in mammals.[14,16,17] It opened the way and gave all the tools for studying apoptosis in *C. intestinalis*. Here, we analysed in the same way the status of autophagic regulators from the four classes previously described. Most yeast ATG proteins possess known orthologs in higher eukaryotes but nothing was known in *C. intestinalis*. We also enlarged the study to some genes absent from yeast genome.

For this study, we took advantage of the three official sites (JGI, Ghost and Aniseed) reporting *C. intestinalis* genomic resources. The *in silico* approach was completed by kinetics of RT-PCR of different messengers to confirm the existence of specific mRNAs and to characterize their temporal expression. Last, we did immunofluorescent staining to detect the protein Beclin (homolog of yeast ATG6) and describe its localisation during development of *Ciona intestinalis*.

## RESULTS

### Genomic study of *Ciona intestinalis* and *Ciona savignyi*

We previously reported the existence of ATG8 / MAP-LC3 homologs in *Ciona intestinalis*.[11] Here we completed the analysis of autophagy gene family by an exhaustive study of *C. intestinalis* databases: Ghost, JGI and Aniseed. More precisely, ATGs, Vps15, Vps34 and TOR sequences from *S. cerevisiae*, *D. melanogaster*, *C. elegans* and *H. sapiens* found on NCBI were used to conduct TBLASTN searches in *C. intestinalis* databases. Results are presented in Table 1 and the Aniseed access numbers of found genes are listed in table 2. We show that ATG, Vps15, Vps34 and TOR genes are present in *C. intestinalis* like in other model organisms here considered. The number of ATG genes in *C. intestinalis* is the same than in humans. Interestingly, there are more ATG genes in the unicellular *S. cerevisiae* than in all other models studied. More precisely, 26 ATG genes are observed in *S. cerevisiae*,[18] whereas only 15 ATG genes are present in *C. intestinalis* and in other species. Those 15 genes are the same in all studied model organisms (*i.e.* ATG1 to 10, 12 to 14, 16 and 18). Indeed, ATG11, 15, 17 and 19 to 29 seem specific of *S. cerevisiae*. We did not find them in *Ciona intestinalis*. Conversely, the number of isoforms of every gene is less important in yeast than in other model organisms (*i.e.* only one isoform for each gene is present). In general, the number of isoforms in *C. intestinalis* genome is comparable to the number of isoforms in human genome and greater than the number in *C. elegans* and/or *D. melanogaster* (i.e. ATG1, 8 and 18). This correlates with the phylogenetic position of urochordates in evolutionary trees.[9,10]

Currently, some genes not present in yeast are described to be important for autophagy in mammalians. As previously mentionned, we scanned *Ciona intestinalis* genome to find some of these genes. Ambra1, Bif-1 and UVRAG interact with Beclin to activate the lipid kinase Vps34.[19] DRAM (Damage-Regulated Autophagy Modulator), like TOR, is a regulator

of autophagy.[20] FIP200 and ATG101 mediate mTOR signalling.[21,22] Interestingly, results show that all these selected genes are present in *Ciona intestinalis* which is not always true for *C. elegans* and/or *D. melanogaster* (Table 3). The Aniseed number of these non-yeast genes are presented in table 4. Here again, results correlate with the phylogenetical position of urochordates in evolutionary trees and confirm that *C. intestinalis* is a good model to study autophagy.

This study of the *C. intestinalis* genome was completed by a similar study in another tunicate with sequenced genome, *C. savignyi* (Tables 1 and 3). The "Ensembl" number of each *C. savignyi* autophagy gene is presented in tables 2 and 4. Like for *C. intestinalis*, ATG, Vps15, Vps34, TOR and all non-yeast tested genes are present in *C. savignyi* genome. The number of ATG genes and the number of isoforms for every ATG gene are identical in both tunicate genomes.

**Relationships between autophagy proteins of ascidians and other species**

In order to study relationships between autophagy proteins of ascidians and other species, we constructed phylogenetic trees by the maximum likelihood method based on multiple alignments of protein sequences (Figure 1). We did this study for most of autophagy genes and show only the results obtained with ATG8 and TOR. These proteins are classically studied in autophagy and are representative of a multi- and a monogenic family, respectively. For a conservative interpretation of trees, we took in consideration only nodes with a bootstrap value higher than 75% (represented with black discs). The bootstrap value is proportional to the reliability of a node. Grey rectangles show branches of the trees to be collapsed because of weak bootstrap support (< 75%).

Results obtained with the multigenic family ATG8 show that three distinct groups are identified: GABARAP, GABARAPL and MAPLC3 (Figure 1A). Interestingly, GABARAPL

proteins seem currently present only in chordates (*H. sapiens* and ascidians). ATG8a from *C. elegans* and ATG8a and ATG8b from *D. melanogaster* seem then homologous to GABARAP proteins. In the MAPLC3 group, we can observe the presence of two subgroups: MAPLC3a/b and MAPLC3c. Human MAPLC3a and b are distinct whereas for *C. intestinalis* and *C. savignyi* we observe the presence of only one protein, MAPLC3ab (as close to *Hs*MAPLC3a than *Hs*MAPLC3b). MAPLC3 seems homologous to ATG8b in *C. elegans* but no equivalent was currently identified in *Drosophila*.

Results obtained with the monogenic family TOR (Figure 1B) show that (i) *C. elegans* is far from other species; a long branch attraction phenomenon is likely to have separated the nematode from *Drosophila*, whereas these two taxa are expected to branch together in the Ecdysozoa clade [23] and (ii) *C. intestinalis* and *C. savignyi* are orthologs, *i.e.*, they originate from a speciation event (Figure 1B) which is representative of the situation for most of the trees obtained for other ATGs (data not shown).

**mRNA level of selected autophagic genes during development of *Ciona intestinalis***

In order to verify if the sequences found *in silico* in *C. intestinalis* genome are actually expressed, we have done RT-PCR experiments 0, 24, 48, 72 and 96 hours after fertilization to evaluate the kinetics of RNA levels during larva and juvenile development (Figure 2B). We chose to work only until 96h because after this stage, siphons are functional and the juvenile becomes able to eat. As described in introduction, the autophagy proteins are divided into 4 functional groups (Figure 2A). We chose to test genes spread in all the four classes. We tested ATG1b and TOR for the kinase regulatory complex; Beclin (ATG6) for the nucleation complex; ATG3, 5, 12, 16 and ATG8 (MAPLC3ab) for the elongation complex, and ATG1b, 9 and 18a for the retrieval complex. Results are compared to the mRNA level of the ubiquitously expressed ribosomal S26 protein.[24] Results show that all the genes tested are expressed during all the development of *C. intestinalis*. Beclin, ATG3, ATG9, ATG16,

MAPLC3ab and TOR mRNA levels decrease during time whereas ATG5 and ATG18a levels are stable. ATG1b and ATG12 seem to have a particular profile with a pick of mRNA at 72 hours after fertilization. Since the embryonic development is a lecithotrophic period (alimentation only results from maternal reserves) with intensive metabolism and high level of cell division, we decided to look more in details the period before hatching (18h). For this purpose, we did a kinetic of mRNA every 2 hours from 0 to 20 hours after fertilization (Figure 2C). We tested the same genes than in the previous kinetic. Results show that some mRNA levels are constant before 20 hours (MAPLC3ab and ATG18a), some mRNA weakly decrease (Beclin and ATG9) and some mRNA levels seem cyclic (ATG16 and TOR). Only two representatives of each category are shown in Figure 2C.

Identical experiments were done for autophagy genes absent from yeast genome (Figure 3) and all tested genes are expressed during development. More precisely, Bif-1 and DRAM seem constant during development. Interestingly, Ambra1 and UVRAG mRNA levels are more tightly regulated: Ambra1 mRNA level is cyclic during time (like ATG16 and TOR) and UVRAG mRNA with the expected size decreases from 0 to 20h post fertilization and disappears at 24h whereas a new form appears at 14h which increases until 96h. This form seems correspond to a differential splicing.

**Protein expression of Beclin during development of *Ciona intestinalis***

To strengthen results obtained on mRNA levels, we tested the presence of Beclin proteins by immunofluorescence experiments with human antibodies. Antibodies chosen raised against a peptide mapping the C-terminus of Beclin-1 of human origin. This part is well conserved between human and *C. intestinalis* (see alignment in figure 4A). A negative control with only the secondary antibody was done to confirm the specificity of the staining (data not shown). This was combined with a TUNEL staining, a specific marker of apoptosis. Results show that contrary to Beclin mRNA that are present throughout the development, the protein

appears only 72 hours after fertilization (Figure 4D). The staining is cytoplasmic and principally observed in cells positive for TUNEL. At 72h, around 50% of the TUNEL positive cells are positive for Beclin staining. At 96h, the number of apoptotic cells decreases whereas the number of autophagic cells is maintained (Figure 4E).

# DISCUSSION

**Actors of autophagy in *Ciona intestinalis***

Autophagy machinery is present in *C. intestinalis* genome. More specifically, the comparison of the number of ATG genes and the number of isoforms for each of these genes suggests that the complexity of this process is comparable to the complexity in human. The genome of the ascidian *C. intestinalis* is among the smallest of any experimentally accessible chordate.[13] Comparison of *C. intestinalis* and vertebrate genomes showed that for most of the crucial mechanisms (*e.g.* cell signalling, cell proliferation and differentiation), *C. intestinalis* retains the ancestral vertebrate gene content, in the sense that paralogous families in vertebrates are often represented by a single gene in *C. intestinalis* (*e.g.* Fgf, Erk or IκBα/ε gene families).[13-15,25,26] However, more rarely, apparent lineage-specific duplications in ascidians are also found.[27] Here we show that for most of autophagy members the number of genes in *C. intestinalis* is comparable to the number in human. Interestingly, the same observation was done for apoptosis,[14,16,17] emphasizing a common characteristic for both programmed cell deaths. Interestingly, we show that *Ci*MAPLC3ab is phylogenetically related to two human proteins, *Hs*MAPLC3a and *Hs*MAPLC3b (Figure 1A). Same situation was observed for *Ci*ATG4ab and *Ci*ATG4cd. This observation was previously described in MAPKinase and NF-κB pathways (i.e. Erk1/2 and IκBα/ε, respectively) [14,15] and in apoptosis (i.e. Caspase 8/9).[17] This suggests that there has been no duplication in *C. intestinalis*, whereas one duplication occurred along the lineage leading to humans.

The study of mRNA levels showed that autophagy genes are expressed in all tested stages of development. This result suggested first that either autophagy was present throughout the development or that the regulation of the mechanism was post-transcriptional. The subsequent study of Beclin proteins by immunofluorescent staining and the results

previously obtained on MAPLC3 protein staining [11] showed that autophagy only appears at 48h or 72h after fertilization. It suggests that there is a post-transcriptional regulation of ATG family members. This regulation is probably completed by post-translational regulations since autophagy genes act in complexes. Interestingly, the cyclic or decreasing expression of a few autophagy genes (Figures 2 and 3) might also influence the level of corresponding proteins after 48h, suggesting the existence of different levels of regulation for autophagy in *C. intestinalis*. The fact that autophagy appears only in late development does not explain why we found a particular regulation of autophagy gene expression between 0 and 20h but is coherent with the lecithotrophic mode of development of the larva. Indeed, siphon formation occurs only two days after hatching and are functional around 96 hours after fertilization. Before this stage, *C. intestinalis* larva develops from energy-rich eggs without external food intake. A way to complement this stock of energy from maternal origin might be to use autophagy to renew pools of nucleotides, amino acids, and ATP for example.

**Autophagic mechanism seems more conserved than apoptosis mechanism**

Apoptosis and autophagy are universal processes documented from plant to fungi and mammals. They both possess crucial physiological roles and are implicated in an increasing number of pathologies. The comparison of our results on autophagy with data previously published on apoptosis[14,16,17] shows that: (i) the complexity of apoptosis regulation (number of regulators) is comparable in ascidians to the complexity in human and is most important than in the unicellular organism *S. cerevisiae*. (ii) the complexity of autophagy regulation (number of regulators) is also comparable in ascidians to the complexity in human but is lower than in the unicellular organism *S. cerevisiae*. How explain these opposing results? Apoptosis is principally described for the regulation of tissue homeostasis of pluricellular organisms. The apoptotic death of specific cells is then important for the survival of the whole organism. Since yeasts are unicellular organisms, they have long been assumed to lack

apoptotic processes. *S. cerevisiae* has been employed as "clean room" for investigating the interaction of proteins involved in apoptosis and PCD. Even if we now know that during yeast colony development, regulated cell death is essential for the long-term survival of the colony population,[28] this could explain why apoptosis is less complex in yeast than in pluricellular organisms. Conversely, autophagy is a mechanism directly involved in both survival and death at cellular level. This observation could explain why this mechanism seems more complex (more ATGs) in the yeast than in pluricellular models studied, which is a very unusual situation. However, it might be noted that non-yeast genes (i.e. UVRAG, Bif-1, DRAM…) are now described to be important in autophagy which can compensate the lower number of ATG genes. Moreover, in pluricellular organisms, proteins implicated in apoptosis are also implicated in the regulation of autophagy, which can also compensate the low number of ATG genes.

***Ciona intestinalis*: a new model to study the crosstalk between apoptosis and autophagy**

We have shown in this study that *Ciona* proteins from both species are well conserved and display orthologs of all mammalian autophagy proteins. Moreover, the number of isoforms of each ATG protein is close to the number in mammals. The complexity of ATG family in ascidians is therefore comparable to that of vertebrates and more complex than in fruit fly and worm. The accumulation of knowledge on apoptosis comes from the parallel studies of different models. For example, caspases were discovered in mutant nematodes and the IAP family of caspase inhibitors were first identified in insect viruses and later in *Drosophila*.[29,30] Similarly, the identification of the ATG genes in yeast and the finding of orthologs revealed the conservation of the mechanism of autophagy in eukaryotes and allowed the use of molecular genetics and molecular biology in different model systems to study this process. Then, the development of a new and non-classical model organism could be a helpful tool in the study of cell death mechanisms. More precisely, *C. intestinalis* could

be a good model to study the molecular links existing between apoptosis and autophagy because markers of both types of death are found in the same tissues and/or in the same cells (Figure 4).[11] Apoptosis and autophagy are finely regulated biological processes that both play a crucial role in control of cell homeostasis. Although they possess specific morphologic and molecular pathways, common regulators begin to be described. Some apoptotic regulators have recently been involved in the regulatory control of autophagy (for example Bcl-2, p53, Arf).[31,32] Conversely, different regulators of autophagy have been shown to regulate apoptosis like DRAM or ATG5.[20,33] In a more general way, inhibition of apoptosis (for example by caspase inhibitor) can lead to autophagy.[34] In counterpart, failure to activate autophagy in response to nutrient deprivation or constitutive activation of autophagy in response to stress can lead to apoptosis. Last, autophagy and apoptosis are often activated together in response to stress.[35]

Our study shows that the majority of autophagy genes are present in *C. intestinalis* genome and all the genes tested are expressed during development. In addition, *C. intestinalis* represents an interesting compromise allowing the *in vivo* experimental study of cell deaths in a chordate (phylum including vertebrates as humans). All these data together with the status of apoptotic regulatory pathways in this species militate in favour of *C. intestinalis* use as a fruitful model to study the crosstalk between autophagy and apoptosis in a developmental context.

# MATERIAL AND METHODS

## Database analysis

Protein sequences from the four reference species, *S. cerevisiae*, *D. melanogaster*, *C. elegans* and *H. sapiens* were found on NCBI (http://www.ncbi.nlm.nih.gov/) using "autophagy" and species name as keywords (for example: "autophagy and *S. cerevisiae*"). For each species, we checked for synonymy among the results obtained (for example: Aut1 = Atg3) to decrease the redundancy of sequences. In the same way, when several proteins were available for the same gene the longest was retained. Each selected sequence was then used to conduct TBLASTN searches in *C. intestinalis* genomic (http://genome.jgi-psf.org/ciona4/ciona4.home.html) and cDNA (http://ghost.zool.kyoto-u.ac.jp/indexr1.html) databases. Among hit sequences, we selectively kept those that were indifferently found with the four reference species. Expectedly, the more the reference species is close to *Ciona intestinalis*, the more the e-value is significant (ranging from 9E-03 to 1E-76 for *S. cerevisiae*; from 1E-04 to 2E-72 for *C. elegans*; from 3E-13 to 2E-91 for *D. melanogaster* and from 7E-21 to 1E-107 for *H. sapiens*) (data not shown). Globally, the results were unambiguous irrespective of which species was used as a query. This step gave clusters of sequences (annotated or not) that we validated with (i) Aniseed web site (http://crfb.univ-mrs.fr/aniseed/), (ii) search for functional domains required for activity with a CD-search on NCBI (http://www.ncbi.nlm.nih.gov/Structure/cdd/wrpsb.cgi) against CDD – 27036 PSSMs database with a low complexity filter (expected domains were always found in *Ciona intestinalis* confirming that the method used give unambiguous results) (data not shown) and (iii) a Best Reciprocal Hit BLAST search (see supplementary data). For this last step, we took each sequence of *C. intestinalis* and re-BLAST it to the four reference genomes using "Ensembl" website. The best hit sequence recovered by this technique is always the

corresponding query autophagy gene, providing additional evidence in favor of orthology. The only exception is yeast ATG1 (ATG1 is not the best hit sequence but the fifth) but we think that is due to the fact that ATG1 is a kinase and the four first sequences are also serine-threonine kinases.

Resulting sequences found in *C. intestinalis* were then used to do TBLASTN searches in the *C. savignyi* databases (http://www.ensembl.org/ and http://www.broad.mit.edu/annotation/ciona/). Some differences in length between *C. intestinalis* and *C. savignyi* sequences should be due to the fact that the genome of the second ascidian contains less complete sequences and annotations.

*C. intestinalis* and *C. savignyi* sequences obtained were then compared in detail with sequences of other species altogether as follows: (i) Alignments of complete protein sequences were done by the program Multalin;[36] (ii) Poorly aligned positions or divergent regions of alignments that may not be homologous were eliminated by G-Blocks program;[37] (iii) Phylogenetic trees were reconstructed by the maximum likelihood method with PhyML 3.0 algorithm.[38] The substitution model used was WAG + Γ and the type of tree improvement was SPR. (iv) The stability of nodes was estimated by ML bootstrap percentages ($BP_{ML}$) computed by PhyML after 100 replicates of site resampling, with BIONJ starting trees. (v) Results were visualized by NJPLOT program and trees were rooted with *S. cerevisiae* as outgroup.

**Animal husbandry**

Adult *C. intestinalis* were collected in the the bay of Roscoff (Finistère, France). Oocytes and sperm were obtained by dissection of gonoducts and cross fertilization was performed in plastic petri dishes. Embryos were cultured as previously described.[14]

**mRNA isolation and semi-quantitative RT-PCR**

Fertilized eggs were collected every 24 hours from $t_{0h}$ to $t_{96h}$ and every 2 hours from $t_{0h}$ to $t_{20h}$ after fertilization. Total RNA was isolated with RNeasy kit according to the supplier's instructions (QIAGEN). RT-PCR was performed on equal input mRNA and cDNA amounts and monitored using S26 control primers.[24] Semi-quantitative PCR was performed on cDNA from each time point of kinetic. PCR products were run on 2% agarose slab gels. Sets of forward (F) and reverse (R) primers designed to amplify each selected gene and the PCR fragment expected size are listed hereafter:

| Name | Forward primer | Reverse primer | PCR fragment size (bp) |
|---|---|---|---|
| ATG1b | 5'-AGAGGCACCTTTCGCATCTA-3' | 5'-TTGCGATGGTTTATGTTCCA-3' | 208 |
| ATG3 | 5'-AAAGCAGTGCATTGGGAGTT-3' | 5'-GCTTGTGGCAAGGAACATTT-3' | 225 |
| ATG5 | 5'-TGAATTCAACGGGAATCCTC-3' | 5'-GCGCTTGAATCTCTTTTTCG-3' | 164 |
| Beclin | 5'-TCCATCCCAAGTGAGGAGAC-3' | 5'-TTGTGTAAGTTTGGCCACCA-3' | 456 |
| MAPLC3ab | 5'-CGGAGACCGAACTTTCAAAC-3' | 5'-CCCGTTAACGAGAAGGAAAA-3' | 250 |
| ATG9 | 5'-ATCATCAAAACCACGGCTTC-3' | 5'-GTCCAACCCTTTCAGTGCAT-3' | 225 |
| ATG12 | 5'-GAGACGCGCCGATATTAAAG-3' | 5'-CCCGAAGCATTCATACAAGG-3' | 185 |
| ATG16 | 5'-GCAAGCAAGGAAAGGTTCAG-3' | 5'-CGAGAAACGTGTCGCTGTTA-3' | 224 |
| ATG18a | 5'-TATTCGTGACACACCCTCCA-3' | 5'-ACAGTTCCTTTGTCCGATGC-3' | 228 |
| TOR | 5'-GTGACGGGAATTGAAGGAAA-3' | 5'-CAGGTCTGGCAGTTCCTGTT-3' | 317 |
| UVRAG | 5'-GGTGAGCTTTTTGGAGCAAG-3' | 5'-TTATTTGATTGGCCCAGCTC-3' | 212 |
| Bif-1 | 5'-AAGACCTTGGAAGCTCGACA-3' | 5'-AACCAAGGGAAGGTGAAGGT-3' | 241 |
| DRAM | 5'-TCTCAGCTGTGGCAGCTTTA-3' | 5'-TAACAGCGGTTGTGCATGAT-3' | 381 |
| AMBRA | 5'-TGATGAAACCGTTGAACCAA-3' | 5'-ACGAAAGGAATCGCTCTTGA-3' | 245 |
| S26 | 5'-ACGTTCGTTGCGAGTCTTCT -3' | 5'-GCCGAGATCTGTTCTTCACC-3' | 210 |

**TUNEL staining and indirect immunofluorescence analysis**

Fertilized eggs were collected every 24 hours from $t_{0h}$ to $t_{96h}$ after fertilization. Embryos and juveniles were fixed for 20 min with 3,7 % formaldehyde in filtered sea water at room temperature. Indirect immunofluorescence and TUNEL staining (kit from Roche Molecular Biochemicals) were performed as described previously.[14] For double labeling studies, Beclin was visualized with a goat polyclonal antibody raised against the epitope mapping near the C-terminus of Beclin-1 of human origin (BECN1-K15, Santa Cruz Biotechnology). Appropriate secondary antibody was FITC-conjugated donkey-anti-goat IgG (Jackson Laboratories). Specimens were analyzed with a Leica TCS 4D laser confocal microscope.

# REFERENCES


1. Kerr JF, Wyllie AH, Currie AR. Apoptosis: a basic biological phenomenon with wide-ranging implications in tissue kinetics. Br J Cancer 1972; 26:239-57.
2. Beaulaton J, Lockshin RA. Ultrasructural study of normal degeneration of intersegmental muscles of antheraea-polyphemus and manduca-sexta (insecta, lepidoptera) with particular reference to cellular autophagy. J Morphol 1977; 154:39-57.
3. Mizushima N, Levine B, Cuervo AM, Klionsky DJ. Autophagy fights disease through cellular self-digestion. Nature 2008; 451:1069-75.
4. Kundu M, Thompson CB. Autophagy: basic principles and relevance to disease. Annu Rev Pathol 2008; 3:427-55.
5. Levine B, Yuan J. Autophagy in cell death: an innocent convict? J Clin Invest 2005; 115:2679-88.
6. Ferraro E, Cecconi F. Autophagic and apoptotic response to stress signals in mammalian cells. Arch Biochem Biophys 2007; 462:210-9.
7. Maiuri MC, Zalckvar E, Kimchi A, Kroemer G. Self-eating and self-killing: crosstalk between autophagy and apoptosis. Nat Rev Mol Cell Biol 2007; 8:741-52.
8. Satoh N. Developmental biology of ascidians. Cambridge: Cambridge Univ. Press 1994.
9. Delsuc F, Brinkmann H, Chourrout D, Philippe H. Tunicates and not cephalochordates are the closest living relatives of vertebrates. Nature 2006; 439:965-8.
10. Delsuc F, Tsagkogeorga G, Lartillot N, Philippe H. Additional molecular support for the new chordate phylogeny. Genesis 2008; 46:592-604.

11. Baghdiguian S, Martinand-Mari C, Mangeat P. Using *Ciona* to study developmental programmed cell death. Semin Cancer Biol 2007; 17:147-53.

12. Conklin E. The organization and cell lineage of the ascidian eggs. J Acad Nat Sci (Philadelphia) 1905; 13:1-119.

13. Dehal P, Satou Y, Campbell RK, Chapman J, Degnan B, De Tomaso A, et al. The draft genome of *Ciona intestinalis*: insights into chordate and vertebrate origins. Science 2002; 298:2157-67.

14. Chambon JP, Soule J, Pomies P, Fort P, Sahuquet A, Alexandre D, et al. Tail regression in *Ciona intestinalis* (prochordate) involves a caspase-dependent apoptosis event associated with ERK activation. Development 2002; 129:3105-14.

15. Maury B, Martinand-Mari C, Chambon JP, Soule J, Degols G, Sahuquet A, et al. Fertilization regulates apoptosis of *Ciona intestinalis* extra-embryonic cells through thyroxine (T4)-dependent NF-kappa B pathway activation during early embryonic development. Dev Biol 2006; 289:152-65.

16. Terajima D, Shida K, Takada N, Kasuya A, Rokhsar D, Satoh N, et al. Identification of candidate genes encoding the core components of the cell death machinery in the *Ciona intestinalis* genome. Cell Death Differ 2003; 10:749-53.

17. Weill M, Philips A, Chourrout D, Fort P. The caspase family in urochordates: distinct evolutionary fates in ascidians and larvaceans. Biol Cell 2005; 97:857-66.

18. Klionsky DJ, Cregg JM, Dunn WA, Emr SD, Sakai Y, Sandoval IV, et al. A unified nomenclature for yeast autophagy-related genes. Dev Cell 2003; 5:539-45.

19. Levine B, Sinha S, Kroemer G. Bcl-2 family members: dual regulators of apoptosis and autophagy. Autophagy 2008; 4:600-6.

20. Crighton D, Wilkinson S, O'Prey J, Syed N, Smith P, Harrison PR, et al. DRAM, a p53-induced modulator of autophagy, is critical for apoptosis. Cell 2006; 126:121-34.

21. Jung CH, Jun CB, Ro SH, Kim YM, Otto NM, Cao J, et al. ULK-Atg13-FIP200 complexes mediate mTOR signaling to the autophagy machinery. Mol Biol Cell 2009; 7:1992-2003.

22. Mercer CA, Kaliappan A, Dennis PB. A novel, human Atg13 binding protein, Atg101, interacts with ULK1 and is essential for macroautophagy. Autophagy 2009; Jul 20;5(5).

23. Philippe H, Lartillot N, Brinkmann H. Multigene analyses of bilaterian animals corroborate the monophyly of ecdysozoa, lophotrochozoa and protostomia. Mol Biol Evol 2005; 22:1246-53.

24. Vincent S, Marty L, Fort P. S26 ribosomal-protein RNA: an invariant control for gene-regulation experiments in eukaryotic cells and tissues. Nucleic Acids Res 1993; 21:1498.

25. Kawai N, Takahashi H, Nishida H, Yokosawa H. Regulation of NF-kappa B/Rel by I kappa B is essential for ascidian notochord formation. Dev Biol 2005; 277:80-91.

26. Leveugle M, Prat K, Popovici C, Birnbaum D, Coulier F. Phylogenetic analysis of *Ciona intestinalis* gene superfamilies supports the hypothesis of successive gene expansions. J Mol Evol 2004; 58:168-81.

27. Kamesh N, Aradhyam GK, Manoj N. The repertoire of G protein-coupled receptors in the sea squirt *Ciona intestinalis*. BMC Evol Biol 2008; 8:129.

28. Frohlich KU, Fussi H, Ruckenstuhl C. Yeast apoptosis: from genes to pathways. Semin Cancer Biol 2007; 17:112-21.

29. Yuan J, Shaham S, Ledoux S, Ellis HM, Horvitz HR. The *C. elegans* cell death gene ced-3 encodes a protein similar to mammalian interleukin-1-beta-converting enzyme. Cell 1993; 75:641-52.

30. Crook NE, Clem RJ, Miller LK. An apoptotis-inhibiting baculovirus gene with a zinc finger-like motif. J Virol 1993; 67:2168-74.

31. Pattingre S, Tassa A, Qu XP, Garuti R, Liang XH, Mizushima N, et al. Bcl-2 antiapoptotic proteins inhibit Beclin 1-dependent autophagy. Cell 2005; 122:927-39.

32. Reef S, Zalckvar E, Shifman O, Bialik S, Sabanay H, Oren M, et al. A short mitochondrial form of p19ARF induces autophagy and caspase-independent cell death. Mol Cell 2006; 22:463-75.

33. Yousefi S, Perozzo R, Schmid I, Ziemiecki A, Schaffner T, Scapozza L, et al. Calpain-mediated cleavage of Atg5 switches autophagy to apoptosis. Nat Cell Biol 2006; 8:1124-32.

34. Vandenabeele P, Vanden Berghe T, Festjens N. Caspase inhibitors promote alternative cell death pathways. Sci STKE 2006; 2006:pe44.

35. Galluzzi L, Morselli E, Vivencio JM, Kepp O, Joza N, Tajeddine N, et al. Life, death and burial: multifaced impact of autophagy. Biochem Soc Trans 2008; 36: 786-90.

36. Corpet F. Multiple sequence alignement with hierarchical clustering. Nucleic acids Res 1988; 16:10881-90.

37. Castresana J. Selection of conserved blocks from multiple alignments for their use in phylogenetic analysis. Mol Biol Evol 2000; 17:540-52.

38. Guindon S, Gascuel O. A simple, fast, and accurate algorithm to estimate large phylogenies by maximum likelihood. Syst Biol 2003; 52:696-704.

# FIGURE LEGENDS

**Figure 1 : Phylogenetic trees of ATG8 and TOR genes.** Maximum likelihood trees were based on multiple alignments of complete protein sequences. The stability of nodes was estimated by ML bootstrap percentages ($BP_{ML}$). *S. cerevisiae* taxa is used as outgroup. Nodes with a bootstrap value superior to 75% are represented with black discs. Grey rectangles show weakly resolved parts of the trees (bootstrap value < 75%). The scale is expressed in number of expected amino acid replacements per site. *Hm*: *Homo sapiens, Sc*: *Saccharomyces cerevisiae*, *Dm: Drosophila melanogaster*, *Ce: Caenorhabditis elegans*, *Ci: Ciona intestinalis* and *Cs: Ciona savignyi*.

**Figure 2 : A. Schematic representation of the mechanism of autophagy in yeast.** The four main steps of autophagy (regulation, nucleation, elongation and retrieval) are presented in different boxes. Vps15 corresponds to p50 in mammals, Vps34 to PI3K, ATG6 to Beclin and ATG8 to MAPLC3. **B-C. Expression levels of ATG and TOR genes during development of *C. intestinalis*.** Total RNA were collected 0, 24, 48, 72 and 96 hours (**B**) and every two hours from 0 to 20 hours (**C**) post fertilization (hpf) and used for RT-PCR analysis. S26 was used as loading control. Beclin is the mammalian homolog of ATG6 and MAPLC3 the homolog of ATG8. Data are representative of three independent experiments.

**Figure 3 : Expression levels of non-yeast autophagy genes during development of *C. intestinalis*.** Total RNA were collected 0, 24, 48, 72 and 96 hours (**A**) and every two hours from 0 to 20 hours (**B**) post fertilization (hpf) and used for RT-PCR analysis. S26 was used as loading control. Data are representative of two independent experiments.

**<u>Figure 4 :</u> A. Typical sequence alignment done with MultAlin program**. Alignment of Beclin from *C. intestinalis* and *H. sapiens* used to choose human antibody for immunofluorescent staining. Underlined sequence corresponds to site recognized by chosen Beclin antibody. Red color corresponds to identical or similar (same biochemical class) amino acids in the two studied sequences. **B-E. Immunofluorescent staining of Beclin.** Pictures were done 24h (B), 48h (C), 72h (D) and 96h (E) post fertilization. TUNEL staining is represented in red and Beclin staining in green (left panel). The corresponding phase appears on the right panel.

**Figure 1**

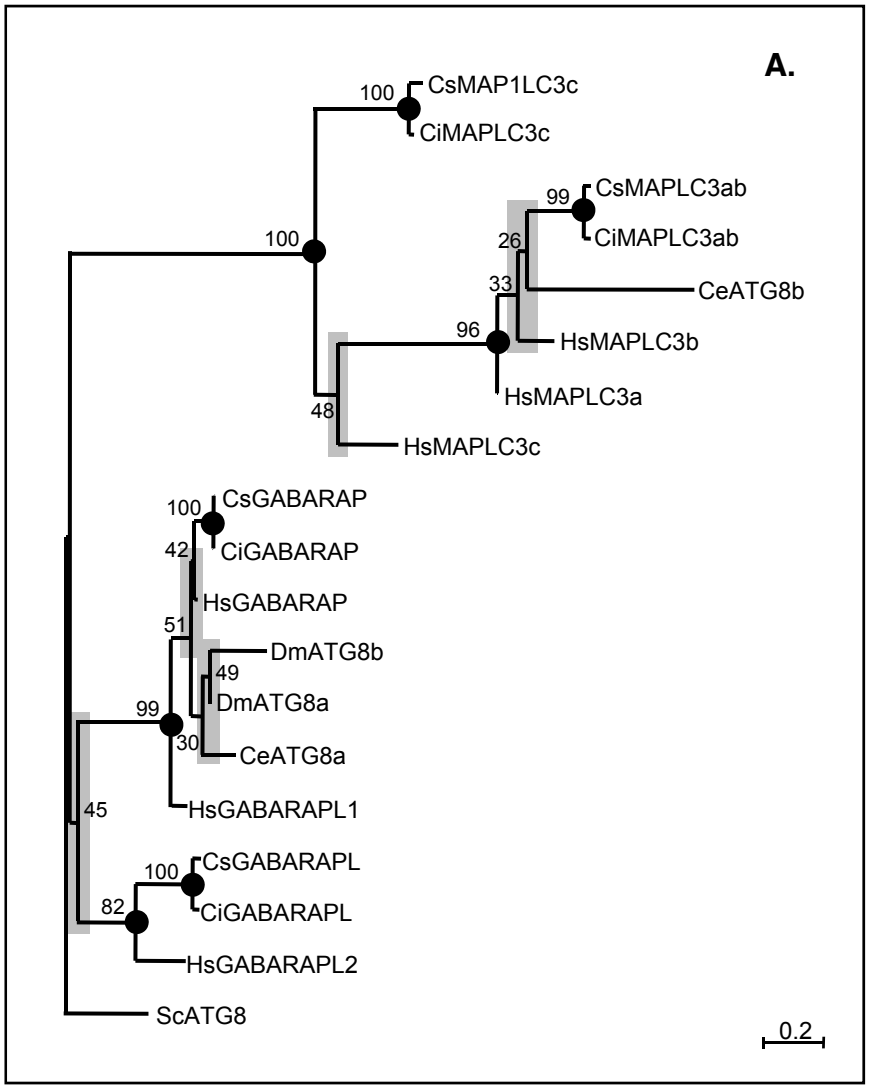
A.
CsMAP1LC3c
CiMAPLC3c
CsMAPLC3ab
CiMAPLC3ab
CeATG8b
HsMAPLC3b
HsMAPLC3a
HsMAPLC3c
CsGABARAP
CiGABARAP
HsGABARAP
DmATG8b
DmATG8a
CeATG8a
HsGABARAPL1
CsGABARAPL
CiGABARAPL
HsGABARAPL2
ScATG8
100
100
99
26
33
96
48
100
42
51
49
99
30
45
100
82
0.2

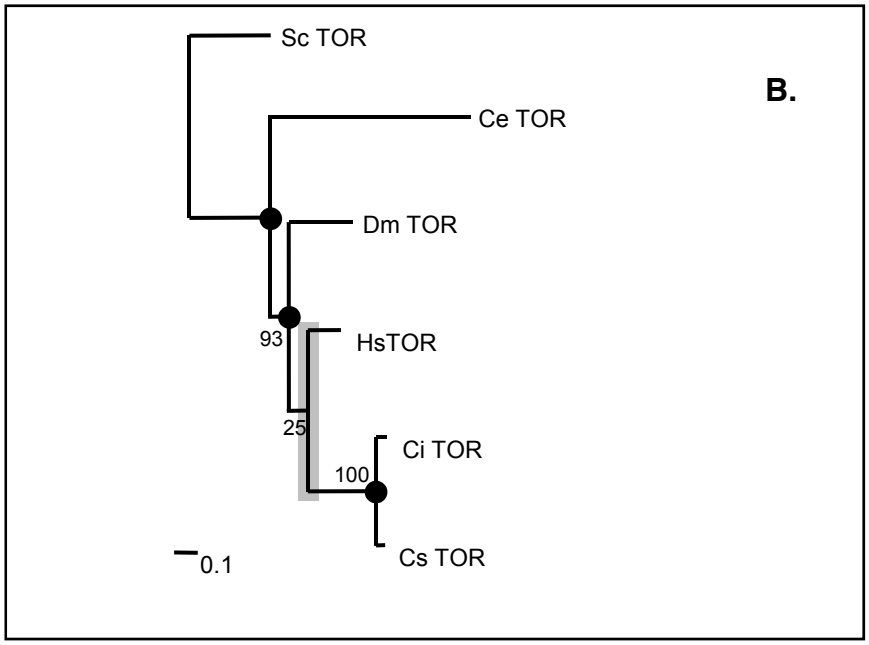
B.
Sc TOR
Ce TOR
Dm TOR
HsTOR
Ci TOR
Cs TOR
93
25
100
0.1

Figure 2

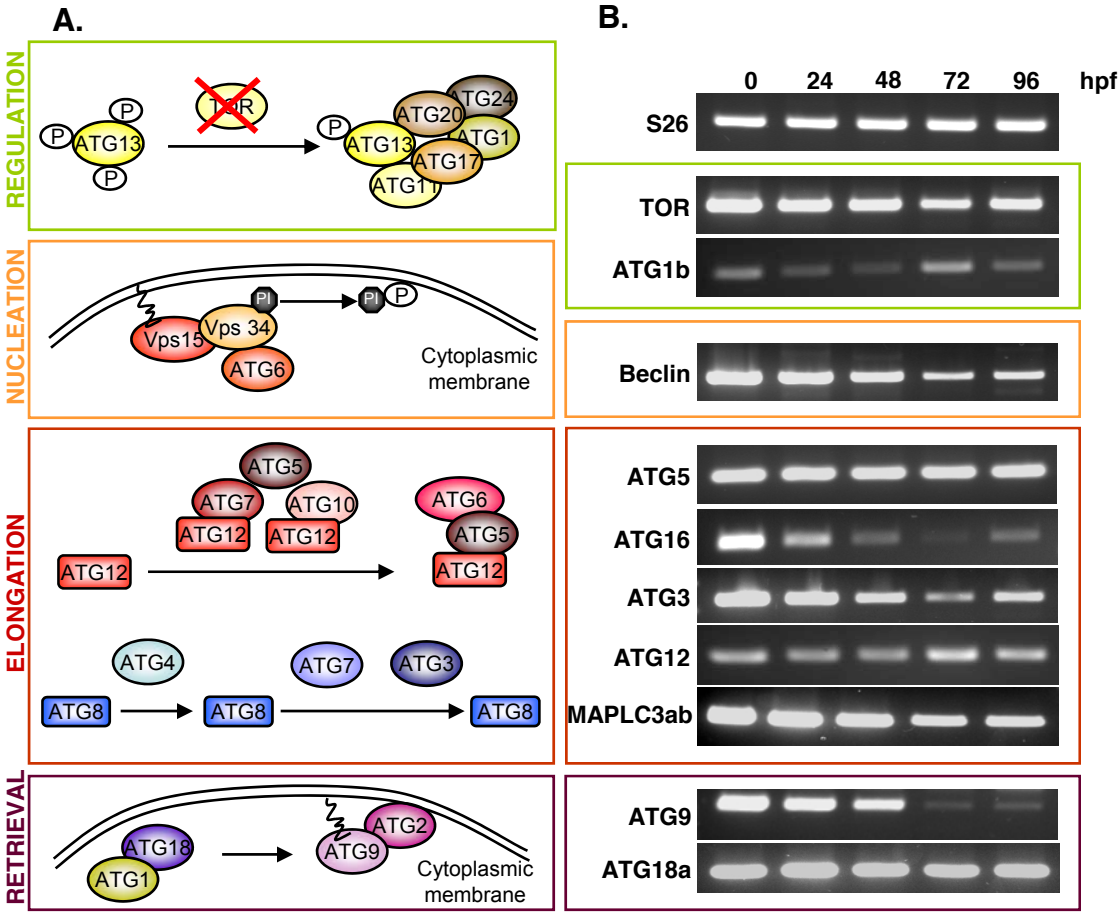
A.
B.
REGULATION
NUCLEATION
ELONGATION
RETRIEVAL
ATG13
TOR
ATG24
ATG20
ATG1
ATG17
ATG11
Vps15
Vps 34
ATG6
PI
Cytoplasmic membrane
ATG5
ATG7
ATG10
ATG12
ATG6
ATG4
ATG3
ATG8
ATG18
ATG2
ATG9
0 24 48 72 96 hpf
S26
TOR
ATG1b
Beclin
ATG5
ATG16
ATG3
ATG12
MAPLC3ab
ATG9
ATG18a

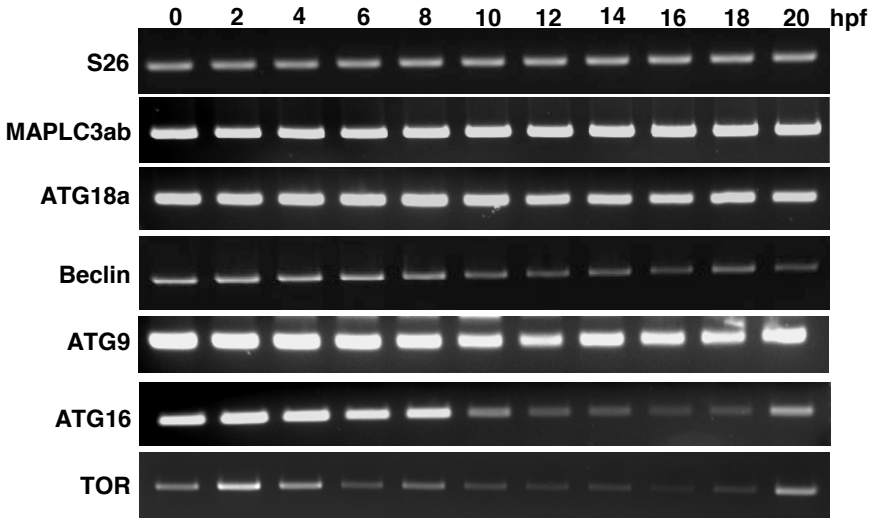
C.
0 2 4 6 8 10 12 14 16 18 20 hpf
S26
MAPLC3ab
ATG18a
Beclin
ATG9
ATG16
TOR

**Figure 3**

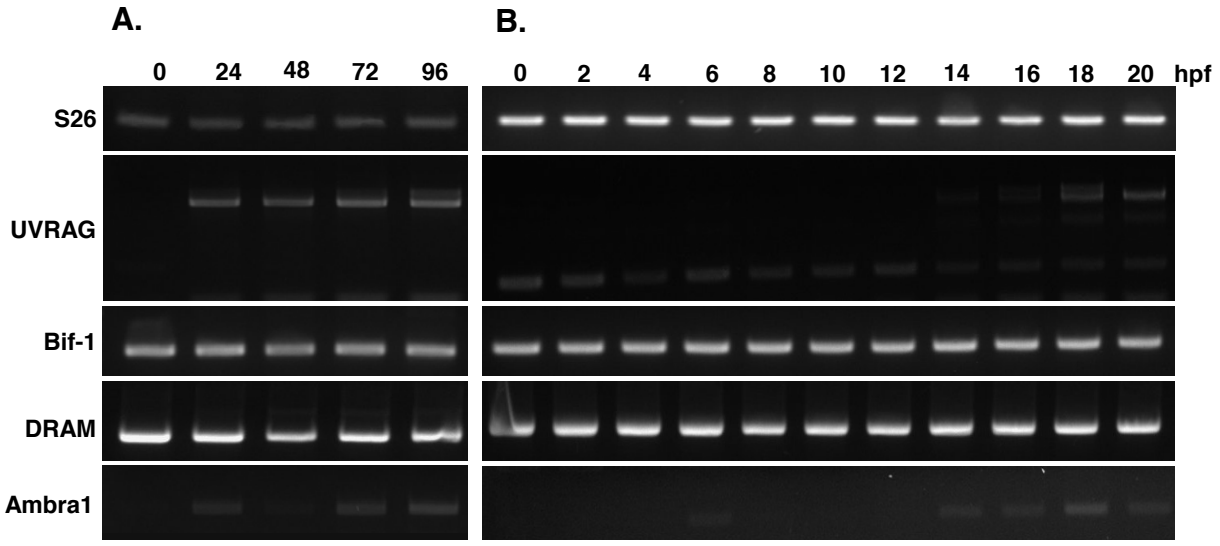
A.
B.
0
24
48
72
96
0
2
4
6
8
10
12
14
16
18
20
hpf
S26
UVRAG
Bif-1
DRAM
Ambra1

## Figure 4

**A.**

```
           1       10        20        30        40        50        60        70        80        90       100
           |--------+---------+---------+---------+---------+---------+---------+---------+---------+---------|
CiBeclin          MTDESICFMCARCKQVIKLDRSFDSIDKQTLQELTSSSRTSTPSEETVAKIDDESQQQLQASSSSDENPPQEQEVSSSGSDNPNEVEDSIYS
HsBeclin  MEGSKTSNNSTMQVSFVCQRCSQPLKLDTSFKILDRVTIQELTAPLLTTAQ-----AKPGETQEEETNSGEEPFIETPRQDGVSRRFIPPAR-----MMS

           101     110       120       130       140       150       160       170       180       190       200
           |--------+---------+---------+---------+---------+---------+---------+---------+---------+---------|
CiBeclin  QNAASSGNEVHESTNSFTFIGDTSMENLSHKMKVIVRLFDLMSDNSDLEHPLCEECTEALLGELNKELKSTETEATLYKNYLSVLEEDKCDHELVAKLTQ
HsBeclin  TESANSFTLIGEASDGGT------MENLSRRLKVTGDLFDIMSGQTDVDHPLCEECTDTLLDQLDTQLNVTENECQNYKRCLEILEQMNEDDS--EQLQM

           201     210       220       230       240       250       260       270       280       290       300
           |--------+---------+---------+---------+---------+---------+---------+---------+---------+---------|
CiBeclin  DLDNLKVEENEILAQLSETEKEREVVKKELEETQKQQEALQREEEKHLQEYSELRVQQIELEEEQCSADLQLMHTDQHLTKLRKTNVFNSTFHIWHQGHF
HsBeclin  ELKELALEEERLIQELEDVEKNRKIVAENLEKVQAEAERLDQEEAQYQREYSEFKRQQLELDDELKSVENQMRYAQTQLDKLKKTNVFNATFHIWHSGQF

           301     310       320       330       340       350       360       370       380       390       400
           |--------+---------+---------+---------+---------+---------+---------+---------+---------+---------|
CiBeclin  GTINGFRLGRLPGVHVEWTEINAAWGQVVLLLSSLAKKMGLKMKRYKLVPFGNHSYIESLDDKAKDLPLYGSGGLRFLWDTKFDQAMVAFLDCLQQFKEA
HsBeclin  GTINNFRLGRLPSVPVEWNEINAAWGQTVLLLHALANKMGLKFQRYRLVPYGNHSYLESLTDKSKELPLYCSGGLRFFWDNKFDHAMVAFLDCVQQFKEE

           401     410       420       430       440       450       460      468
           |--------+---------+---------+---------+---------+---------+-------|
CiBeclin  VE-GNSGFSLPYRM--EKGKIEDTGGSGASYSIKMQFNSEEQWTKALKFMLTNLKWGLAWVSSQFTPS
HsBeclin  VEKGETRFCLPYRMDVEKGKIEDTGGSGGSYSIKTQFNSEEQWTKALKFMLTNLKWGLAWVSSQFYNK
                                              ____________________________
                                                   BECN1 antibody
```

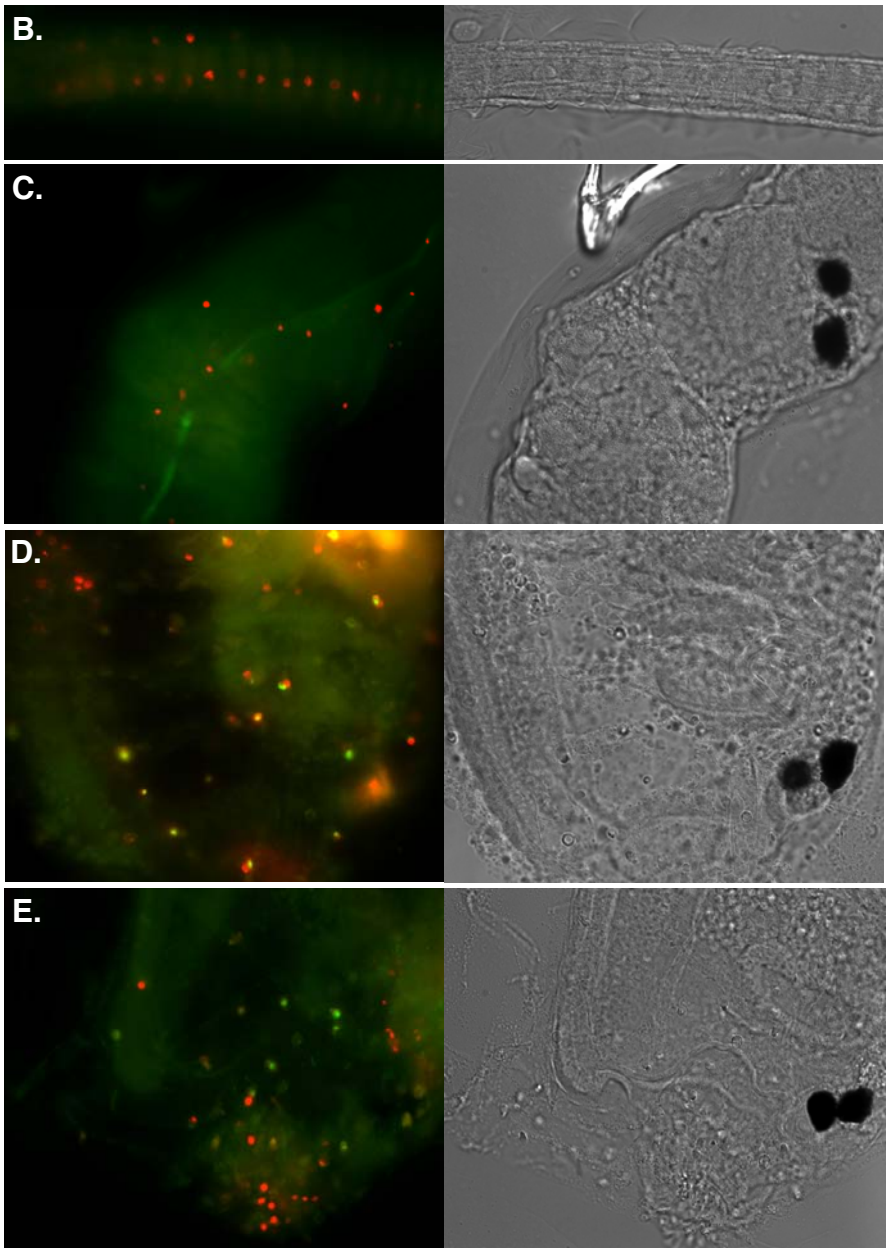

| *S. cerevisiae* | *C. elegans* | *D. melanogaster* | *H. sapiens* | *C. intestinalis* | *C. savignyi* |
|---|---|---|---|---|---|
| ATG1 | ATG1 | ATG1 | Ulk1<br>Ulk2 | ATG1a<br>ATG1b | ATG1a<br>ATG1b |
| ATG2 | ATG2 | ATG2 | ATG2a<br>ATG2b | ATG2 | ATG2 |
| ATG3 | ATG3 | ATG3 | ATG3 | ATG3 | ATG3 |
| ATG4 | ATG4ab<br>ATG4cd | ATG4ab<br>ATG4cd | ATG4a<br>ATG4b<br>ATG4c<br>ATG4d | ATG4ab<br>ATG4cd | ATG4ab<br>ATG4cd |
| ATG5 | ATG5 | ATG5 | ATG5 | ATG5 | ATG5 |
| ATG6 | ATG6 | ATG6 | Beclin | Beclin | ATG6 |
| ATG7 | ATG7 | ATG7 | ATG7 | ATG7 | ATG7 |
| ATG8 | ATG8a<br>ATG8b | ATG8a<br>ATG8b | GABARAP<br>GABARAPL1<br>GABARAPL2<br>MAP1LC3a<br>MAP1LC3b<br>MAP1LC3c | GABARAP<br>GABARAPL<br>MAP1LC3ab<br>MAP1LC3c | GABARAP<br>GABARAPL<br>MAP1LC3ab<br>MAP1LC3c |
| ATG9 | ATG9 | ATG9 | ATG9a<br>ATG9b | ATG9 | ATG9 |
| ATG10 | ATG10 | ATG10 | ATG10 | ATG10 | ATG10 |
| ATG11 | | | | | |
| ATG12 | ATG12 | ATG12 | ATG12 | ATG12 | ATG12 |
| ATG13 | ATG13 | ATG13 | ATG13 | ATG13 | ATG13 |
| ATG14 | | ATG14 | ATG14 | ATG14 | ATG14 |
| ATG15 | | | | | |
| ATG16 | ATG16a<br>ATG16b | ATG16 | ATG16a<br>ATG16b | ATG16 | ATG16 |
| ATG17 | | | | | |
| ATG18 | ATG18 | ATG18a<br>ATG18b | WIPI1<br>WIPI2 | ATG18a<br>ATG18b | ATG18a<br>ATG18b |
| ATG19 | | | | | |
| ATG20 | | | | | |
| ATG21 | | | | | |
| ATG23 | | | | | |
| ATG24 | | | | | |
| ATG26 | | | | | |
| ATG27 | | | | | |
| ATG29 | | | | | |
| TOR | TOR | TOR | TOR | TOR | TOR |
| Vps34 | Vps34 | Vps34 | Vps34 | Vps34 | Vps34 |
| Vps15 | Vps15 | Vps15 | Vps15 | Vps15 | Vps15 |

**<u>Table 1 :</u> Proteins involved in autophagy in main biological models used to study cell death** (*Saccharomyces cerevisiae, Homo sapiens*, *Caenorhabditis elegans and Drosophila melanogaster*) **and in *Ciona intestinalis* and *Ciona savignyi***.

| | *Aniseed access number* **of *C. intestinalis* ATGgenes (expected size of the protein)** | *Ensembl access number* **of *C. savignyi* ATGgenes (expected size of the protein)** |
|---|---|---|
| ATG1a<br>ATG1b | AniseedV3_8720 (289 aa)<br>AniseedV3_6298 (469 aa) | ENSCSAVG00000003676 (216 aa)<br>ENSCSAVG00000000980 (463 aa) |
| ATG2 | AniseedV3_2916 (> 1874 aa) | ENSCSAVG00000011248 (1007 aa) |
| ATG3 | AniseedV3_586 (311 aa) | ENSCSAVG00000009773 (309 aa) |
| ATG4ab<br>ATG4cd<br><br>ATG5 | AniseedV3_777 (339 aa)<br>AniseedV3_3196 (517 aa)<br><br>AniseedV3_6852 (268 aa) | ENSCSAVG00000009423 (238 aa)<br>ENSCSAVG00000007934 (539 aa)<br><br>ENSCSAVG00000001871 (265 aa) |
| ATG6 | AniseedV3_3169 (457 aa) | ENSCSAVG00000006180 (450 aa) |
| ATG7 | AniseedV3_4974 (690 aa) | ENSCSAVG00000001008 (658 aa) |
| GABARAP<br>GABARAPL<br>MAPLC3ab<br>MAPLC3c | AniseedV3_590 (117 aa)<br>AniseedV3_1441 (118 aa)<br>AniseedV3_1732 (121 aa)<br>AniseedV3_3323 (128 aa) | SINCSAVG00000002571 (117 aa)<br>SINCSAVG00000008201 (117 aa)<br>SINCSAVG00000000344 (120 aa)<br>ENSCSAVG00000005086 (126 aa) |
| ATG9 | AniseedV3_4509 (646 aa) | ENSCSAVG00000001887 (584 aa) |
| ATG10 | AniseedV3_7553 (> 100 aa) | reftig_0: 1456360-1456704 (309 aa) |
| ATG12 | AniseedV3_7938 (100 aa) | SINCSAVG00000010176 (88 aa) |
| ATG13 | AniseedV3_6774 (490 aa) | ENSCSAVG00000003971 et<br>ENSCSAVG00000003975 (508 aa) |
| ATG14<br><br>ATG16 | aniseedV3_3954 (512 aa)<br><br>AniseedV3_4063 (586 aa) | ENSCSAVG00000011215 et<br>ENSCSAVG00000011216 (446 aa)<br>ENSCSAVG00000003517 (205 aa) |
| ATG18a<br>ATG18b | AniseedV3_4411 (441 aa)<br>AniseedV3_2119 (420 aa) | ENSCSAVG00000003785 (444 aa)<br>ENSCSAVG00000001829 (361 aa) |
| TOR | AniseedV3_4055 (2506 aa) | ENSCSAVG00000001147 (2479 aa) |
| Vps34 | AniseedV3_5314 (934 aa) | ENSCSAVG00000004119 (941 aa) |
| Vps15 | AniseedV3_2823 (1384 aa) | ENSCSAVG00000007099 (1090 aa) |

**Table 2 : Sequence references of ATGs, TOR, Vps15 and Vps34 genes in *Ciona intestinalis* and *Ciona savignyi*.**

| *C. elegans* | *D. melanogaster* | *H. sapiens* | *C. intestinalis* | *C. savignyi* |
|---|---|---|---|---|
| | | UVRAG | UVRAG | UVRAG |
| Bif-1 | Bif-1 | Bif-1 | Bif-1 | Bif-1 |
| DRAM | DRAM | DRAM | DRAM | DRAM |
| | | Ambra1 | Ambra1 | Ambra1 |
| | FIP200 | FIP200 | FIP200 | FIP200 |
| | ATG101 | ATG101 | ATG101 | ATG101 |

**Table 3 : Non-yeast autophagy genes involved in autophagy in main biological models used to study cell death** (*Caenorhabditis elegans*, *Drosophila melanogaster* and *Homo sapiens*) **and in *Ciona intestinalis* and *Ciona savignyi***.

| | ***Aniseed access number* of *C. intestinalis* ATGgenes (expected size of the protein)** | ***Ensembl access number* of *C. savignyi* ATGgenes (expected size of the protein)** |
|---|---|---|
| UVRAG | aniseedV3_4017 (760 aa) | ENSCSAVG00000004541 (654 aa) |
| Bif-1 | aniseedV3_1199 (400 aa) | ENSCSAVG00000011204 (354 aa) |
| DRAM | aniseedV3_2977 (269 aa) | ENSCSAVG00000007544 (242 aa) |
| Ambra1 | aniseedV3_2335 (807 aa) | ENSCSAVG00000010643 (>233 aa) |
| FIP200 | aniseedV3_1578 (1338 aa) | ENSCSAVG00000003604 (>301 aa) |
| ATG101 | aniseedV3_1902 (246 aa) | ENSCSAVG00000010963 (228 aa) |

**Table 4 : Sequence references of non-yeast genes in *Ciona intestinalis* and *Ciona savignyi*.**